Confidential

30" Electric Range
SERVICE MANUAL

CAUTION

BEFORE SERVICING THE UNIT, READ THE SAFETY PRECAUTIONS IN THIS MANUAL.

MODEL: LSEL6335F
LSEL6335D

Copyright © 2021 LG Electronics Inc. All rights reserved. Only training and service purposes

MFL69401915_Rev00. 02012021

FORWARD

This LG Service Manual, “ 30” Freestanding Self-Cleaning Electric Range,” provides the technician with information on the operation and service of the Freestanding Self-Cleaning Electric Range. It is to be used as a training Service Manual. For specific information on the model being serviced, refer to the “Owner’s Manual” or “Tech Sheet” provided with the electric range.

SAFETY PRECAUTIONS

- Repairs of the appliance should be carried out by a licensed technician only. Incorrect repairs may result in dangerous situations. If you need repairs, contact an LG Service Center or your dealer.
- If the power cord is defective, it must be replaced by a qualified service agent with a UL listed range cord.
- Electrical leads and cables should not be allowed to touch the oven.
- Rating plate is located on the left side of warming drawer.
- The power supply of the appliance should be turned off when it is being repaired.

⚠ WARNING

- **DISCONNECT power supply cord from the outlet before servicing.**
- **Replace all panels and parts before operating.**
- **RECONNECT all grounding devices.**

- Failure to do so can result in severe personal injury, death or electrical shock.

- **DO NOT Touch when the oven operates.**

- The interior parts will be very hot.

LG Electronics assumes no responsibility for any repairs made
on our products by anyone other than Authorized Service Technicians.

Copyright © 2021 LG Electronics Inc. All rights reserved.
Only training and service purposes

TABLE OF CONTENTS

(Page)

GENERAL ..... 1-1 ~ 1-5
- Important safety instructions ..... 1-1 ~ 1-3
- Model & Serial number label and tech sheet locations 1-4
- Specifications 1-5

USING YOUR RANGE ..... 2-1 ~ 2-7
- General information 2-1
- Control panel features ..... 2-2 ~ 2-7
  - Setting the clock
  - Start, Clear/Off
  - To turn on/off the oven light
  - Timer on/off
  - Oven temperature adjustment
  - Preheating alarm light on/off
  - Beeper volume
  - Temperature unit (°F or °C)
  - Bake, timed bake
  - Broil
  - Timed cook with warm
  - Control lock
  - Changing hour mode on clock (12hr, 24hr)
  - Self-Clean
  - Auto conversion

COMPONENT ACCESS ..... 3-1 ~ 3-20
- Component Locations 3-1
- Removing the back cover 3-2
- Removing the oven relay PCB, power PCB 3-3
- Removing the ceramic glass cooktop and the surface element 3-4
- Removing the controller 3-5
- Removing knob and infinite switch 3-6
- Removing a side panel 3-7
- Removing the cooling motor, thermal disk and Rdoor switch ..... 3-8 ~ 3-9
- Removing the broil element 3-10
- Removing the convection element, fan blade and fan motor 3-11
- Removing the oven light & socket assembly 3-12
- Removing the latch drive assembly 3-13
- Removing the oven temperature sensor 3-14
- Removing & replacing the lit-off oven door and drawer ..... 3-15 ~ 3-16
- Removing the oven door handle & glass ..... 3-17 ~ 3-18
- Removing the oven door gasket 3-19
- Removing a InstaView PCB 3-20

COMPONENT TEST ..... 4-1 ~ 4-12
- Convection Motor 4-1
- Door locking Motor 4-2
- Micro Switch 4-2
- Oven Sensor 4-2
- Door switch 4-3
- Broil heater 4-3
- Convection heater 4-3
- Oven lamp 4-3
- Infinite switch(Single units): (LR, RR, CR Switch) 4-4
- Infinite switch((Double units): (LF,RF switch) ..... 4-5 ~ 4-6

Copyright © 2021 LG Electronics Inc. All rights reserved.
Only training and service purposes

- Infinite switch((Triple units): (RF switch) ····· 4-7 ~ 4-8
- Single surface units: (LR, RR Element) ····· 4-9
- Center Rear(CR) Element ····· 4-10
- Dual surface units (LF Element) ····· 4-11
- Triple surface unit (Right Front(RF) Element) ····· 4-12

SCHEMATIC DIAGRAM ····· 5-1 ~ 5-5
- Bake / Conv. Bake / Conv. ····· 5-2
- Self cleaning ····· 5-2
- Broil ····· 5-3
- Warm / Proof / Easy clean ····· 5-3
- Heating Element ····· 5-3
- Stalled fan & Temp probe ····· 5-3
- Oven light ····· 5-4
- CR Cook-top Element ····· 5-4
- LR & RR Cook-top Element ····· 5-4
- LF Cook-top Element ····· 5-5
- RF Cook-top Element ····· 5-5

COMPOSITION OF CONTROL ····· 6-1 ~ 6-3
- Main PCB ····· 6-2
- Power PCB ····· 6-2
- LED Module ····· 6-3
- Touch film ····· 6-3
- Wifi PCB ····· 6-3

SVC TEST MODE ····· 7-1~7-3

TROUBLE SHOOTING ····· 8-1

FAILURE CODE SUMMARY ····· 9-1

CHECKING FLOW CHART BY FAILURE ····· 10-1 ~ 10-26
- Power Failed(Dead), No display? ---------- 10-1 ~ 10-4
- No heating, F9? ---------- 10-5 ~ 10-8
- Door Lock System Failure / F10 ---------- 10-9 ~ 10-11
- Sensing Fail / F1 / F2 ---------- 10-12 ~ 10-14
- Oven hot, F6? ---------- 10-15 ~ 10-18
- Key not working / F3 Error ---------- 10-19 ~ 10-20
- Instaview not operation ---------- 10-21 ~ 10-22
- Convection Fan Error / F-7 ---------- 10-23 ~ 10-24
- Sensing Fail / F-8 ---------- 10-25 ~ 10-26

APPENDIX ····· 11-1

EXPLODED VIEW ····· 12-1 ~ 12-6

Copyright © 2021 LG Electronics Inc. All rights reserved.
Only training and service purposes

GENERAL

IMPORTANT SAFETY INSTRUCTIONS

Read and follow all instructions before using your oven to prevent the risk of fire, electric shock, injury to person, or damage when using the range. This guide don't cover all possible conditions that may occur. For further assistance contact your service agent or manufacturer.

⚠ This is the safety alert symbol. This symbol alerts you to potential hazards that can kill or hunt you and others. All safety messages will follow the safety alert symbol and either the word "WARNING" or "CAUTION". These word means :

⚠ WARNING This symbol will alert you to hazards or unsafe practices which could cause serious bodily harm or death.

⚠ CAUTION This symbol will alert you to hazards or unsafe practices which could cause bodily injury or property damage.

⚠ WARNING

- **DO NOT step or sit on the door and install the Anti-Tip Bracket packed with range.**
  - The range could be tipped and injury might result from spilled hot liquid, food, or the range itself.
  - If the range is pulled away from the wall for cleaning, service, or any other reason, ensure that the Anti-Tip Device is properly reengaged when the range is pushed back against the wall.
- **DISCONNECT power supply cord from the outlet before servicing.**
- **Replace all panels and parts before operating.**
- **RECONNECT all grounding devices.**
  - Failure to do so can result in severe personal injury, death or electrical shock.
- **DO NOT touch heating elements or interior surfaces of oven.**
  - Heating element may be hot even though they are dark in color.
  - Interior surfaces of an oven become hot enough to cause burns.
- **During and after use, do not touch, or let clothing or other flammable materials contact heating elements or interior surfaces of oven until they have had sufficient time to cool.**
  - Other surfaces of the appliance may become hot enough to cause burns among these surfaces are oven vent openings and surfaces near these openings, oven doors, and windows of oven doors.
- **DO NOT store items of interest to children in cabinets above a range or on the back guard of a range.**
  - Children climbing on the range to reach items could be seriously injured.

⚠ CAUTION

- **Always use Pot Holders or oven mitts when removing food from the Warming Drawer.**
  - You can be burned as cookware and plates will be hot.
- **Be careful when you work on the electric range handling the sheet metal part.**
  - Sharp edge may be present and you can cut yourself.
- **Be careful not to bend the fan blade**
  - Failure to do so can result in vibration, noise, and poor performance of convection when operating.
- **Be careful not to scratch or chip the oven liner paint when you remove the oven light socket in the next step.**
- **Turn power OFF before removing the Warming Drawer.**
- **Be careful when removing and lifting the door.**
- **DO NOT lift the door by the handle.**
  - Failure to do so can result in personal injury as the door is very heavy.

Copyright © 2021 LG Electronics Inc. All rights reserved.
Only training and service purposes

IMPORTANT SAFETY INSTRUCTIONS

- Be sure your appliance is properly installed and grounded by a qualified technician.
- Do not repair or replace any part of the appliance unless specifically recommended in the manual.
  All other servicing should be referred to a qualified technician.
- Always disconnect power to appliance before servicing by removing the fuse or switching off the circuit breaker

⚠ WARNING





- **DO NOT step or sit on the door and install the Anti-Tip Bracket packed with range.**

- The range could be tipped and injury might result from spilled hot liquid, food, or the range itself.
- If the range is pulled away from the wall for cleaning, service, or any other reason, ensure that the Anti-Tip Device is properly reengaged when the range is pushed back against the wall.

To reduce the risk of tipping of the range, the range must be secured by properly installed anti-tip devices. To check if the bracket is installed properly,

- **Warming drawer :** grasp the top rear edge of the Range and carefully attempt to tilt it forward.
  verify that the anti-tip devices are engaged.
- **Storage drawer :** Remove drawer and verify leveling leg is inserted into and fully secured by the anti-tip devices.

Refer to the installation manual for proper anti-tip bracket installation.

⚠ WARNING

- **DO NOT touch heating elements or interior surfaces of oven.**

- Heating element may be hot even though they are dark in color.
- Interior surfaces of an oven become hot enough to cause burns.

- **During and after use, do not touch, or let clothing or other flammable materials contact heating elements or interior surfaces of oven until they have had sufficient time to cool.**

- Other surfaces of the appliance may become hot enough to cause burns among these surfaces are oven vent openings and surfaces near these openings, oven doors, and windows of oven doors.

⚠ WARNING

- **DO NOT store items of interest to children in cabinets above a range or on the back guard of a range.**

- Children climbing on the range to reach items could be seriously injured.

Copyright © 2021 LG Electronics Inc. All rights reserved.
Only training and service purposes

IMPORTANT SAFETY INSTRUCTIONS

- **Do Not Leave Children Alone -** Children should not be left alone or unattended in area where appliance is in use. They should never be allowed to sit or stand on any part of the appliance.
- **Never Use Your Appliance for Warming or Heating the Room.**
- **Storage in or on Appliance –** Flammable materials should not be stored in an oven or near surface units. Be sure all packing materials are removed from the appliance before operating it. Keep plastics, clothes and paper away from parts of the appliance that may become hot
- **Wear Proper Apparel –** Loose-fitting or hanging garments should never be worn while using the appliance.
- **Do Not Use Water on Grease Fires –** Turn off oven to avoid spreading the flame. Smother the fire or flame by closing the door or use dry chemical, baking soda or foam- type extinguisher.
- **Use Only Dry Potholders –** Moist or damp potholders on hot surfaces may result in burns from steam.
  Do not let potholder touch hot heating elements. Do not use a towel or other bulky cloth.

⚠ WARNING

- **DISCONNECT power supply cord from the outlet before servicing.**
- **Replace all panels and parts before operating.**
- **RECONNECT all grounding devices.**

- Failure to do so can result in severe personal injury, death or electrical shock.

SURFACE COOKING UNITS

- **Use Proper Pan Size –** This appliance is equipped with one or more surface units of different sizes. Select utensils having flat bottoms large enough to cover the surface unit heating element. The use of undersized utensils will expose a portion of the heating element to direct contact and may result in ignition of clothing. Proper relationship of utensil to burner will also improve efficiency.
- **Never Leave Surface Units Unattended at High Heat Settings –** Boil overs may cause smoking and greasy spillovers may ignite.
- **Make Sure Reflector Pans or Drip Bowls Are in Place –** Absence of these pans or bowls during cooking may subject wiring or components underneath to damage.
- **Protective Liners –** Do not use aluminum foil to line surface unit drip bowls or oven bottoms, except as suggested in the manual. Improper installation of these liners may result in a risk of electric shock, or fire.
- **Glazed Cooking Utensils –** Only certain types of glass, glass/ceramic, ceramic, earthenware, or other glazed utensils are suitable for range-top service without breaking due to the sudden change in temperature.
- **Utensil Handles Should Be Turned Inward and Not Extend Over Adjacent Surface Units –** To reduce the risk of burns, ignition of flammable materials, and spillage due to unintentional contact with the utensil, the handle of a utensil should be positioned so that it is turned inward, and does not extend over adjacent surface units.
- **Do Not Soak Removable Heating Elements –** Heating elements should never be immersed in water.
- Be sure you know which control pads operate each surface unit. Make sure you turned on the correct surface unit.

SELF-CLEAN OVENS

- **Do Not Clean Door Gasket –** The door gasket is essential for a good seal. Care should be taken not to rub, damage, or move the gasket.
- **Do Not Use Oven Cleaners –** No commercial oven cleaner or oven liner protective coating of any kind should be used in or around any part of the oven.
- **Clean in the self-clean cycle only parts listed in this manual.** Before self-cleaning the oven, remove the broiler pan and any utensils from the oven.
- **Never keep pet birds in the kitchen –** the health of birds is extremely sensitive to the fumes released during an oven self-clean cycle. Fumes may be harmful or fatal to birds. Move birds to well-ventilated room.
- **Important Instruction –** In the event the self-clean mode “F” code goes on, or three long beeps sound, oven is malfunctioning in the self-clean mode. Turn off or disconnect appliance from power supply and have serviced by a qualified technician.

VENTILATING HOODS:

- **Clean Ventilating Hoods Frequently –** Grease should not be allowed to accumulate on hood or filter.
- **When flaming foods under the hood, turn the fan on.**

OVEN

- **Use Care When Opening Door –** Let hot air or steam escape before you remove or replace food in the oven
- **Do Not Heat Unopened Food Containers –** Build-up of pressure may cause container to burst and result in injury.
- **Keep Oven Vent Ducts Unobstructed –** the oven vent is located above the left rear surface unit. this area could become hot during oven use. Never block this vent and never place plastic or heat-sensitive items on vent
- **Placement of Oven Racks –** Always place oven racks in desired location while oven is cool. If rack must be moved while oven is hot, do not let potholder contact hot heating element in oven.
- **Do Not** allow aluminum foil or meat probe to contact heating elements.

GLASS/CERAMIC COOKING SURFACES

- **Do Not Cook on Broken Cook-Top –** If cook-top should break, cleaning solutions and spillovers may penetrate the broken cook-top and create a risk of electric shock. Contact a qualified technician immediately.
- **Clean Cook-Top With Caution –** If a wet sponge or cloth is used to wipe spills on a hot cooking area, be careful to avoid steam burn. Some cleaners can produce noxious fumes if applied to a hot surface.

DEEP FAT FRYERS:

- Use extreme caution when moving the grease kettle or disposing of hot grease.

Copyright © 2021 LG Electronics Inc. All rights reserved.
Only training and service purposes

MODEL & SERIAL NUMBER LABEL AND TECH SHEET LOCATIONS

The Model/Serial Number label and Tech Sheet locations are shown below.



Copyright © 2021 LG Electronics Inc. All rights reserved.
Only training and service purposes

GENERAL

SPECIFICATIONS

Model Number		LSEL6335F/LSEL6335D
Category		Slide-in oven range
Overall	Width	29.9"
	Installation type	Slide-In
	Color availability	STS/BK STS
Control	Oven	Glass Touch
	Cooktop	Knob
	Display	LED
	Electronic clock & timer	Yes
	Control lock capability	Yes
	Audible preheat signal	Yes
	Special function	Setting (7 categories) 1. Change hour mode on Clock 2. Convection Auto Conversion On/Off 3. Oven Temp Adjust 4. Preheat alarm light On/Off 5. Beeper volume High/Low/Mute 6. Select Fahrenheit or Celsius temperature 7. Cooktop Alarm volume High/Low/Mute
Cooktop	Material	Ceramic glass
	# of element	5
Power	LR	6"- 1,200W
	RR	6"- 1,200W
	CR	7"- 100W
	LF	9"/6"- 3,200W/1,400W
	RF	12"/9"/6" - 3,000W/2,200W/1,100W
Oven	Capacity(cu.ft)	**6.3**
	Broil element	4,200 W
	Bake element	No
	Convection System	Yes
	-Convection element	2,500 W
	# of Racks	2 Heavy duty rack, 1 Air fry rack
	Interior oven light	120V, 40W
	Proof	Yes
	Keepwarm	Yes
	Favorites	No
	Easy clean	Yes
	Control lock	Yes
Drawer	Type	Storage drawer
	Element	No
	Warming rack	No
Dimensions (inch)	Oven Interior(W x H x D)	24.9" x 21.4" x 20"
	Exterior - Width	29.9"
	Exterior - Height	36.6"
	Exterior - Depth	26.9"(Door), 29.3"(Handle)
	Net weight: Lbs (Kg)	161.7 lbs (73.3 kg)
Power	Rating	13.0Kw(120/240V AC) / 9.8Kw(120/208V AC)

Copyright © 2021 LG Electronics Inc. All rights reserved.
Only training and service purposes

USING YOUR RANGE

GENERAL INFORMATION

Rating Label

Model numbers are recorded on the rating label. Rating label is located on the lower front left corner of the oven frame. It can be seen by opening the storage drawer or warming drawer. Before ordering parts, write down the correct model and serial number from rating label. This avoids incorrect shipments and delays. Please refer to parts reference material when ordering replacement parts.

Functional Operation

Bake Mode

Upper and rear elements operate during bake. Bake can be used to cook foods which are normally baked. Oven must be preheated.

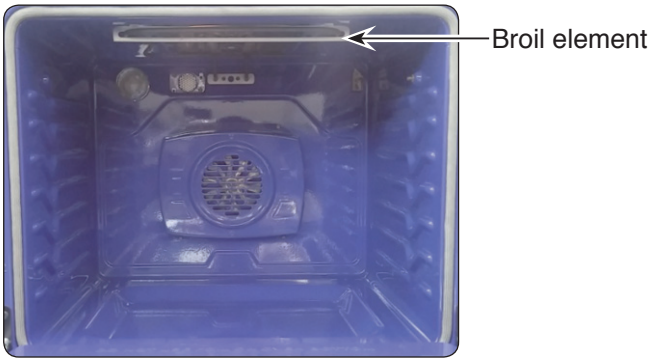

Broil Mode

Top element operates during broil. Broil can be used to cook foods which are normally broiled. All foods should be turned at least once except fish, which does not need to be turned.

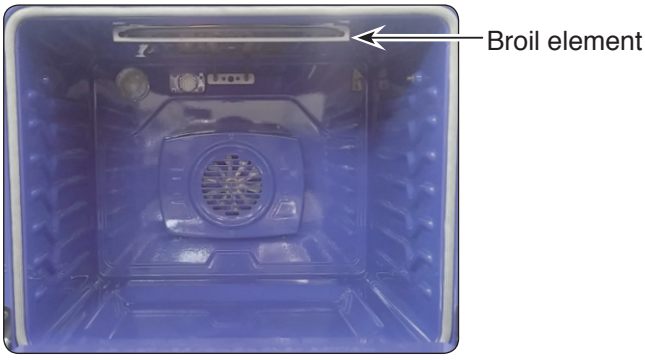

Convection Bake / Roast Mode

Upper element, lower element, Rear element(some model) and fan operate during convection bake. Convection bake should be used for cooking casseroles and roasting meats. Oven should be preheated for best results when using convection bake. Pans do not need to be staggered. Difference between bake and convection mode is fan speed and amount of cycling time. When cook with bake mode, fan speed and amount of cycle tine is lower than convection mode. Difference between convection bake and convection roast at high temperature (More 330F) is that amount of broil cycling time. Broil cycling time of convection roast is more than twice than convection bake mode.

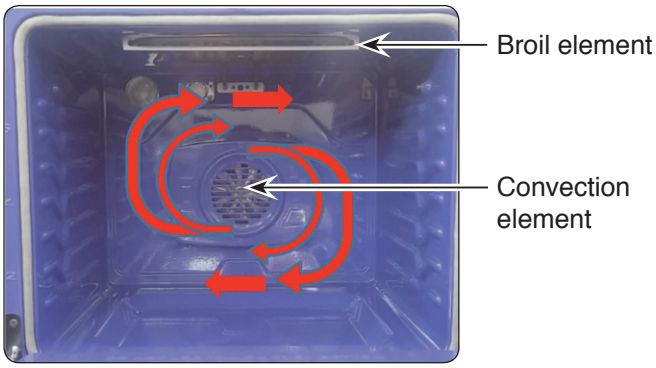

Cooking Guide

Refer to the owners manual for recommendations of times and temperatures. Times, rack position, and temperatures may vary depending on conditions and food type. For best results, always check food at minimum time. When roasting, choose rack position based on size of food item.

Copyright © 2021 LG Electronics Inc. All rights reserved.
Only training and service purposes

USING YOUR RANGE

CONTROL PANEL FEATURES

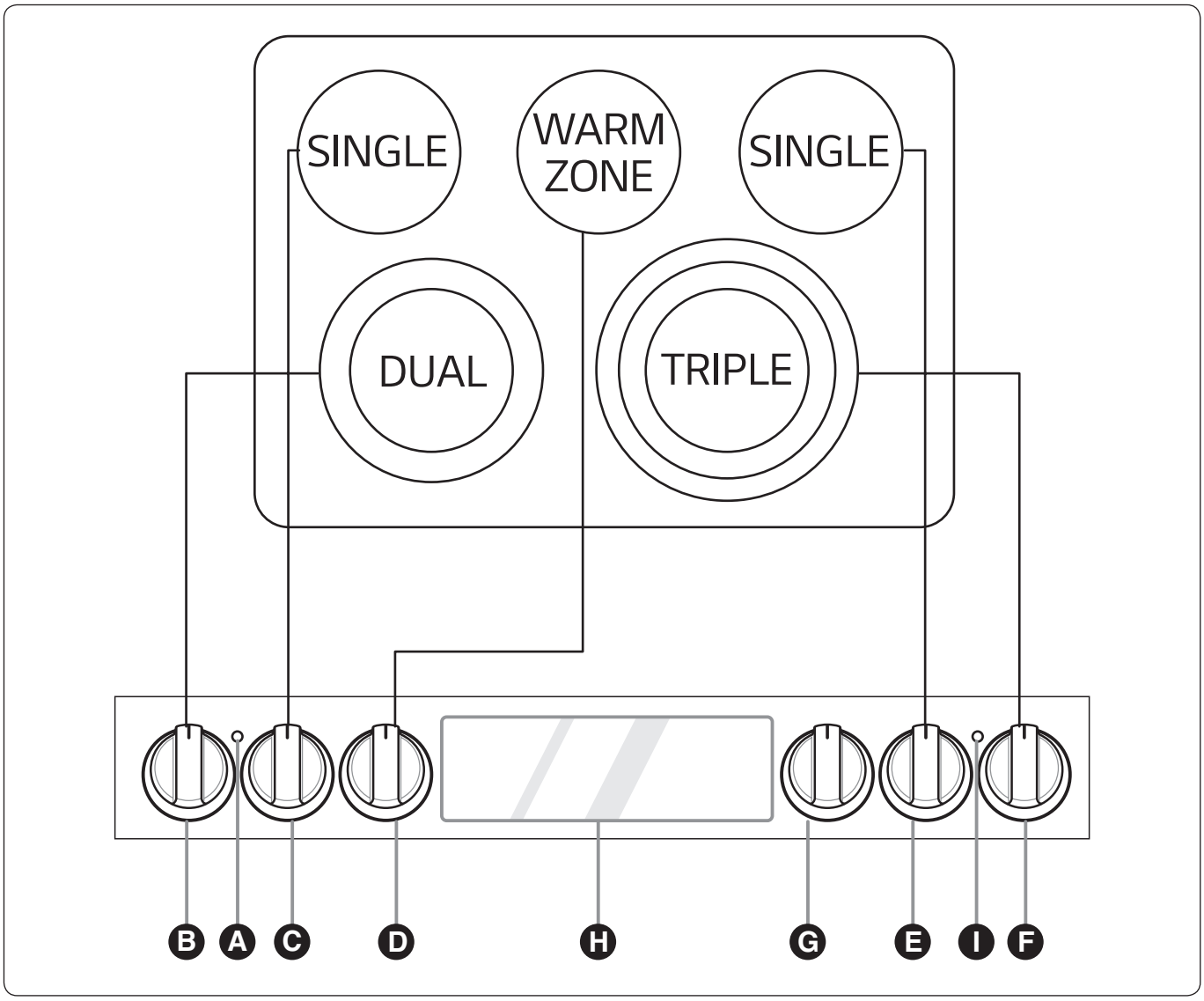

A. ELEMENT ON/OFF INDICATOR LIGHT : Shows whether the surface element is turned on/off or hot.

B. LEFT FRONT (DUAL) CONTROL KNOB : Use to control Left Front Element.

C. LEFT REAR (SINGEL) CONTROL KNOB : Use to control Left Rear Element.

D. CENTER REAR (WARM) CONTROL KNOB : Use to control Center Rear Element.

E. RIGHT REAR (SINGLE) CONTROL KNOB : Use to control Center Rear Element.

F. RIGHT FRONT (Triple) CONTROL : Use to control Right Front Element.

G. OVEN CONTROL KNOB : Turn the knob to select oven operating mode.

H. OVEN CONTROL : Use to control Oven.

I. HOT SURFACE INDICATOR LIGHT : It will glow as long as any surface cooking area is too hot to touch

Copyright © 2021 LG Electronics Inc. All rights reserved.
Only training and service purposes

Use to turn on the surface elements. An infinite choice of heat settings is available from LOW to HIGH. The knobs can be set on or between any of settings.

To turn on a Single element:

1. Push the Single element knob in.
2. Turn the knob in either direction to the desired setting.
   The control knob clicks when it is positioned at both Off and Hi.

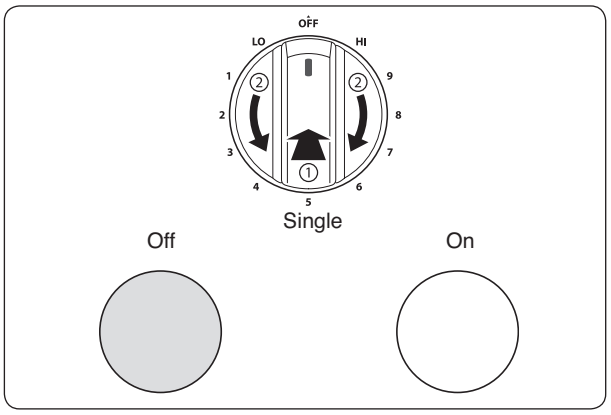

NOTE:

- Hi is the highest temperature available.
- Lo is the lowest temperature available.

To turn on the Dual element:

There is one dual element located in the left front position. Use the dual element as a dual or single element.

1. Push in the appropriate knob.

2-1. Turn the knob counterclockwise to use it as a Single element.

2-1. Turn the knob clockwise to use it as a Dual unit.

To turn on the Dual element:

There is one dual element located in the left front position. Use the dual element as a dual or single element.

1. Push in the appropriate knob.

2-1. Turn the knob counterclockwise to use it as a Single element.

2-1. Turn the knob clockwise to use it as a Dual unit.

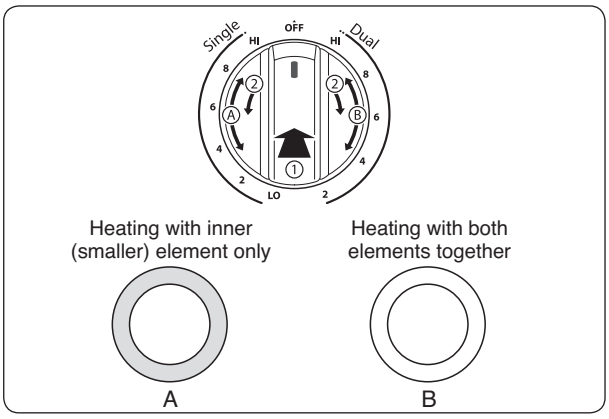

Turning on a Triple Element

There is one triple element that can be used as a single, dual or triple element.

1. Push in the appropriate knob.

2-A. Turn the knob counterclockwise to use the Single element.

2-B. Turn the knob clockwise to the Dual position to use as a Dual element.

2-C. Turn the knob clockwise to the Triple position to use as a Triple element.

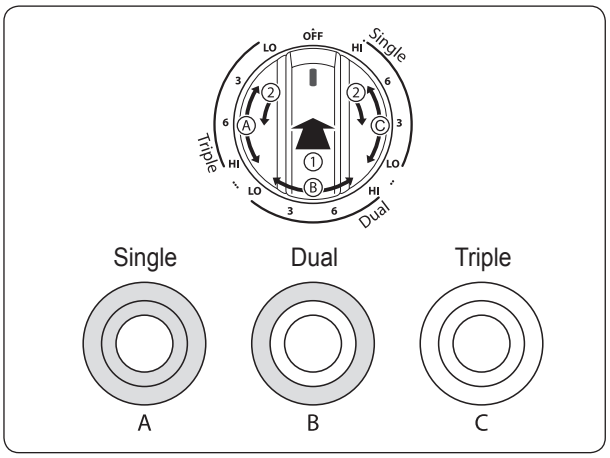

Copyright © 2021 LG Electronics Inc. All rights reserved.
Only training and service purposes

To turn on the Warming Zone:

⚠ CAUTION

- **FOOD POISON HAZARD: Bacteria may grow in food at temperatures below 140 °F.**

- Always start with hot food. Do not use the warm setting to heat cold food.
- Do not use the warm setting for more than 2 hours.

The Warming Zone, located in the back center of the glass surface, will keep hot, cooked food at serving temperature. Use the Warming Zone to keep food warm after it has already been cooked. Attempting to cook uncooked or cold food on the Warming Zone could result in a food-borne illness.

1. Turn the control knob to the On position.

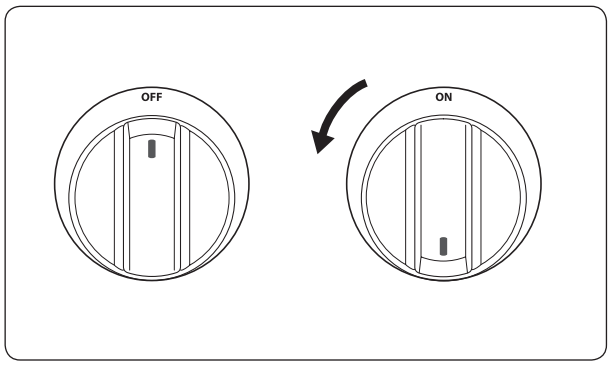

NOTE:

- For best results, food on the warmer should be kept in its container or covered with a lid or aluminum foil to maintain food quality.
- The warmer will not glow red like the other cooking elements.
- The Warming Zone can be operated as a single element on some models.

Copyright © 2021 LG Electronics Inc. All rights reserved.
Only training and service purposes

USING YOUR RANGE

CONTROL PANEL FEATURES

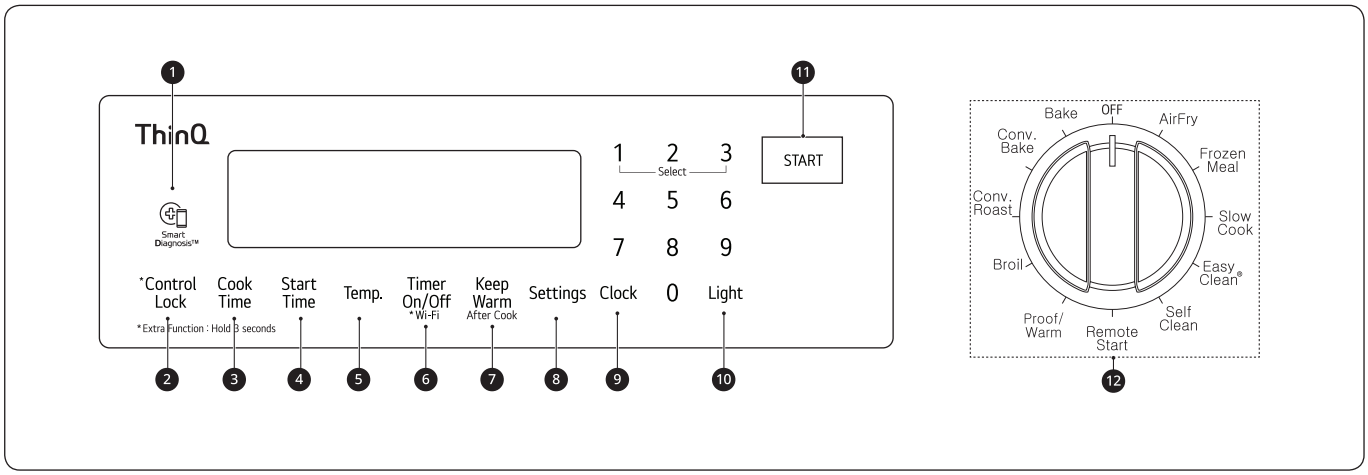

❶ Smart Diagnosis™
Use during the Smart Diagnosis feature.

❷ Control Lock
Press and hold the button for 3 seconds to lock the control panel.

❸ Cook Time
Press the button to set the desired amount of time for food to cook. The oven shuts off when the set cooking time runs out.

❹ Start Time
Press the button to set the delayed timed cook. The oven starts at the set time.

❺ Temp
Press the button to set the oven temperature during oven use.

❻ Timer On/Off / Wi-Fi
Press the button to set or cancel timer on oven. Press and hold button for three seconds to connect the appliance to a Wi-Fi network.

❼ Keep Warm
Press the button to keep food warm after cooking.
• This feature should be used after cooking in the oven.

❽ Setting
Press button to select and adjust oven settings.

❾ Clock
Press button to set the time of day.

❿ Light
Press the button to turn oven light on or off.

⓫ START
Press the button to start all oven features.

⓬ Oven Mode Knob
Turn the knob to select oven operating mode.

Copyright © 2021 LG Electronics Inc. All rights reserved.
Only training and service purposes

USING YOUR RANGE

1. SETTING THE CLOCK

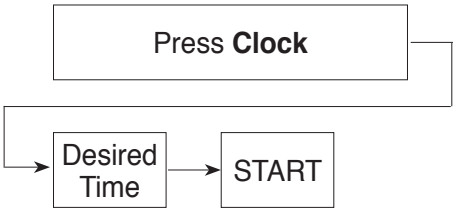

2. START, CLEAR/OFF

1. Touch **START** key to start oven.
2. Turn the **Oven mode** knob to cancel a program during cooking or Erase during programming.

3. TO TURN ON/OFF THE OVEN LIGHT

The oven light automatically turns ON when the door is opened.

1. The oven light may also be manually turned ON or OFF by press the OVEN LIGHT pad.
2. Knocking twice on the glass panel turns the interior light on or off.

NOTE:

1. The oven light cannot be turned on if self-clean feature is active.
2. The light turns off automatically after 90 seconds.

4. TIMER ON/OFF

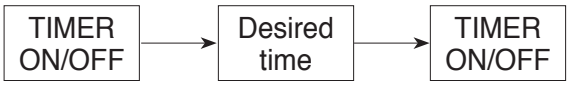

To cancel timer at any time, touch **TIMER ON/OFF** pad.

NOTE:

1. If you press **TIMER ON/OFF** key once, this allows you to select "seconds"
   (for example: if you press "5" and "6", it means 56 seconds)
2. If you press **TIMER ON/OFF** key twice, this allows you to select "minutes"
   (for example: if you press "5" and "6", it means 56 minutes)

5. OVEN TEMPERATURE ADJUSTMENT

The oven temperature can be adjusted from -35°F (-19°C) to 35°F (19°C).

NOTE: The oven temperature adjustments made with this feature will just change Bake, temperature.

1. Press **Setting** repeatedly until **AdJU** appears in the display.
2. Use the number keys to enter the number of degrees you want to adjust the oven temperature.
   Press **Setting** again to add a minus sign if decreasing the temperature.
3. Press **Start** to accept the change.

6. PREHEATING ALARM LIGHT ON/OFF

1. Press **Setting** repeatedly until **PrE** appears in the display.
2. Press **1** to turn the light on/off.
3. Press **Start** to accept the change.

7. BEEPER VOLUME

1. Press **Setting** repeatedly until **Beep** appears in the display.
2. Press **1** repeatedly to select **Hi, Lo** or **Off**.
3. Press **Start** to accept the change.

8. TEMPERATURE UNIT(°F or °C)

1. Press **Setting** repeatedly until **Unit** appears in the display.
2. Press **1** to select **F** (Fahrenheit) or **C** (Celsius).
3. Press **Start** to accept the change.

9. BAKE, TIMED BAKE

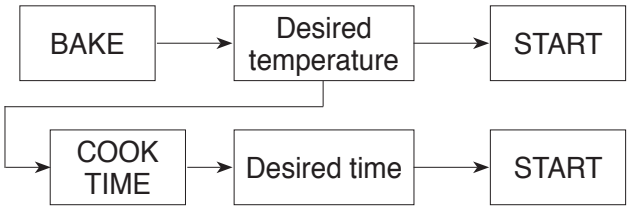

10. BROIL

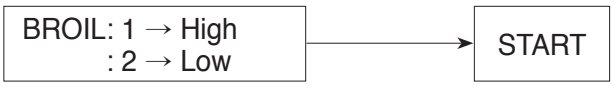

Copyright © 2021 LG Electronics Inc. All rights reserved.
Only training and service purposes

11. TIMED COOK WITH WARM

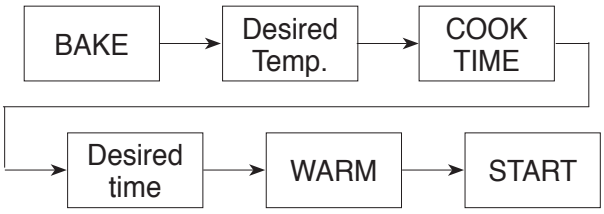

12. CONTROL LOCK

Press and hold the **Control Lock** key for 3 seconds
(to activate or reactivate Control Lock)

13. CHANGING HOUR MODE ON CLOCK (12HR, 24HR)

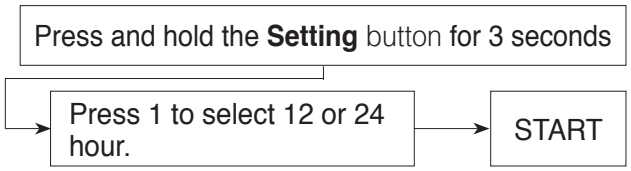

14. SELF-CLEAN

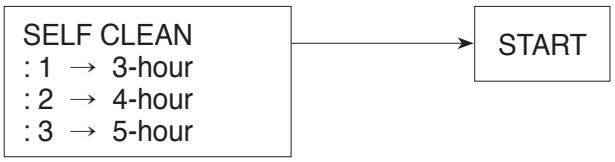

15. AUTO CONVERSION

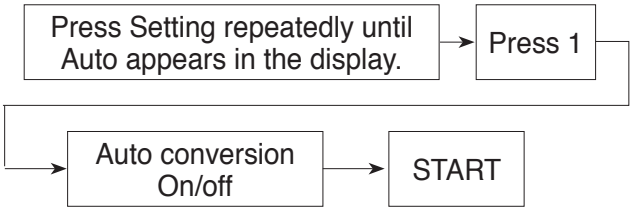

Copyright © 2021 LG Electronics Inc. All rights reserved.
Only training and service purposes

COMPONENT ACCESS

This section instructs you on how to service each component inside the range. The components and their locations are shown below.

COMPONENT LOCATIONS

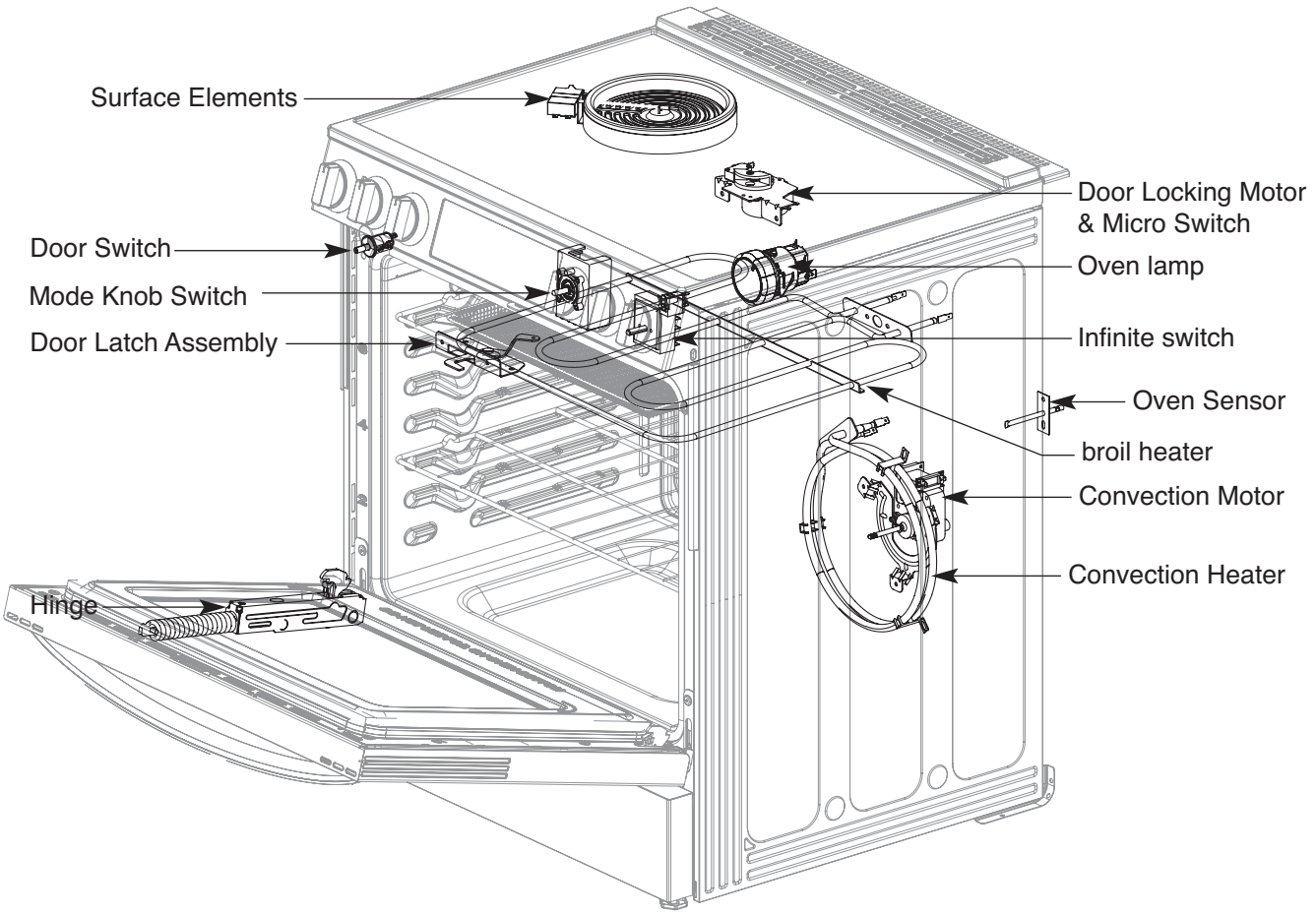

Copyright © 2021 LG Electronics Inc. All rights reserved.
Only training and service purposes

COMPONENT ACCESS

REMOVING THE BACK COVER

⚠ WARNING

- **DISCONNECT power supply cord from the outlet before servicing.**
- **Replace all panels and parts before operating.**
- **RECONNECT all grounding devices.**

- Failure to do so can result in severe personal injury, death or electrical shock.

⚠ CAUTION

- **Be careful when you work on the electric range handling the sheet metal part.**

- Sharp edge may be present and you can cut yourself.

1. Turn off the electrical supply going to the range.
2. Pull the range away from the wall so that you can access the rear panel.
3. To remove the back cover, remove 14 screw from the cover.



Copyright © 2021 LG Electronics Inc. All rights reserved.
Only training and service purposes

COMPONENT ACCESS

REMOVING THE OVEN RELAY PCB, POWER PCB

⚠ WARNING

- **DISCONNECT power supply cord from the outlet before servicing.**
- **Replace all panels and parts before operating.**
- **RECONNECT all grounding devices.**

- Failure to do so can result in severe personal injury, death or electrical shock.

⚠ CAUTION

- **Be careful when you work on the electric range handling the sheet metal part.**

- Sharp edge may be present and you can cut yourself.

1. Turn off the electrical supply going to the range.
2. Pull the range away from the wall so that you can access the rear panel.
3. Remove back cover (See step 3 on page 3-2)



Power PCB

4. **To remove the PCB,** Disconnect the 8 ea housing and remove the 2ea screw.

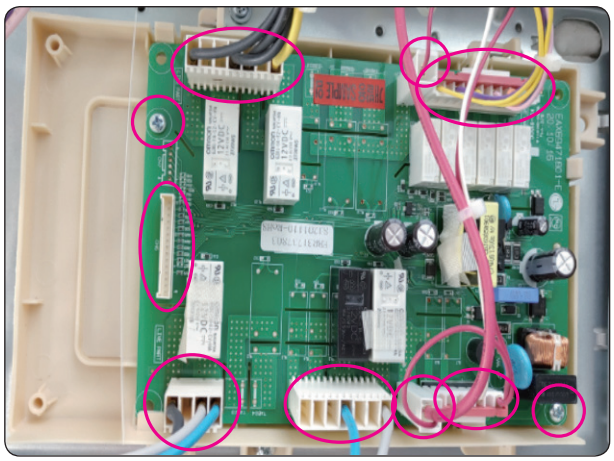

Copyright © 2021 LG Electronics Inc. All rights reserved.
Only training and service purposes

COMPONENT ACCESS

REMOVING THE CERAMIC GLASS COOKTOP AND THE SURFACE ELEMENT

⚠ WARNING

- **DISCONNECT power supply cord from the outlet before servicing.**
- **Replace all panels and parts before operating.**
- **RECONNECT all grounding devices.**

- Failure to do so can result in severe personal injury, death or electrical shock.

⚠ CAUTION

- **Be careful when you work on the electric range handling the sheet metal part.**

- Sharp edge may be present and you can cut yourself.

1. Turn off the electrical supply going to the range.
2. Pull the range away from the wall so that you can access the rear panel.
3. Remove 8 screws on the back.



4. Remove the vent gril.

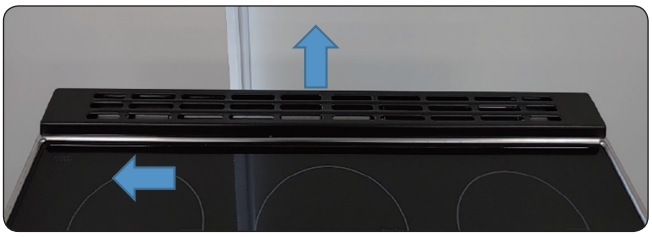

5. Remove 2 screws.

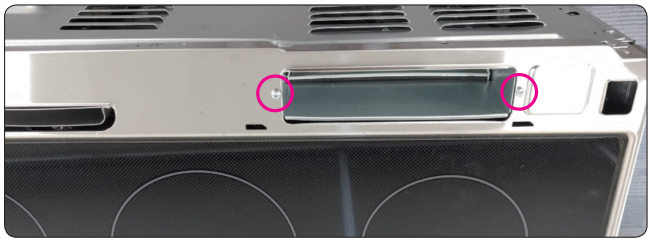

6. After lifting the back of the top plate, pull it out forward.
   Remove 2 connectors which connect controller harness with cooktop harness.

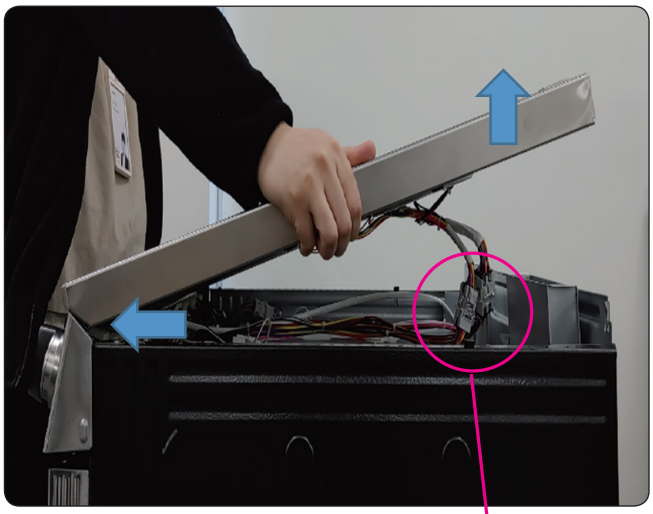

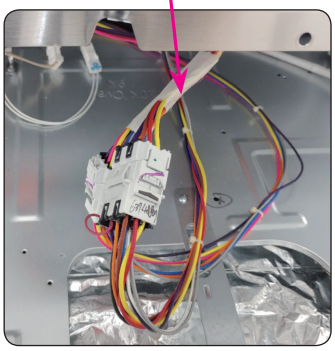

NOTE : If the above is difficult, Disengage front clips using a steel ruler.

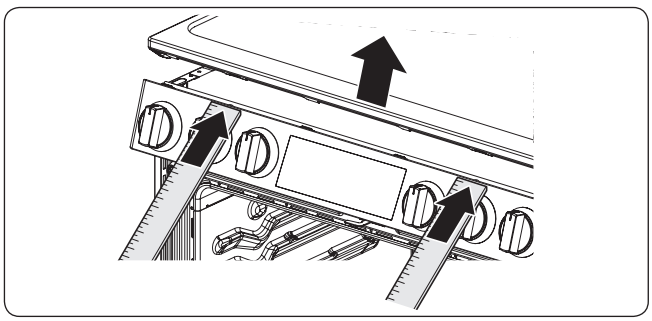

Copyright © 2021 LG Electronics Inc. All rights reserved.
Only training and service purposes

COMPONENT ACCESS

REMOVING THE CONTROLLER

⚠ WARNING

- **DISCONNECT power supply cord from the outlet before servicing.**
- **Replace all panels and parts before operating.**
- **RECONNECT all grounding devices.**

- Failure to do so can result in severe personal injury, death or electrical shock.

⚠ CAUTION

- **Be careful when you work on the electric range handling the sheet metal part.**

- Sharp edge may be present and you can cut yourself.

1. Turn off the electrical supply and gas supply going to the range.
2. Remove the cooktop plate. (see “Remove the cooktop plate” on the 3-4 Page)
3. To disassemble controller panel, remove 6 screws and take out the hook hanging from the side panel.

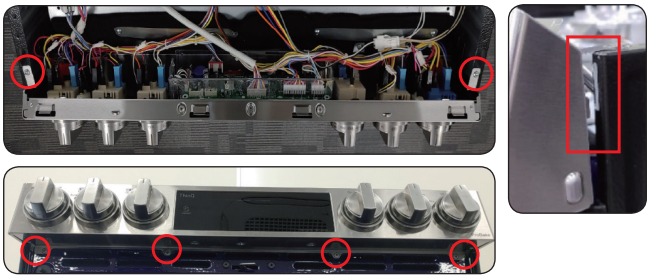

4. To remove the main PCB supporter, remove 4 screws.

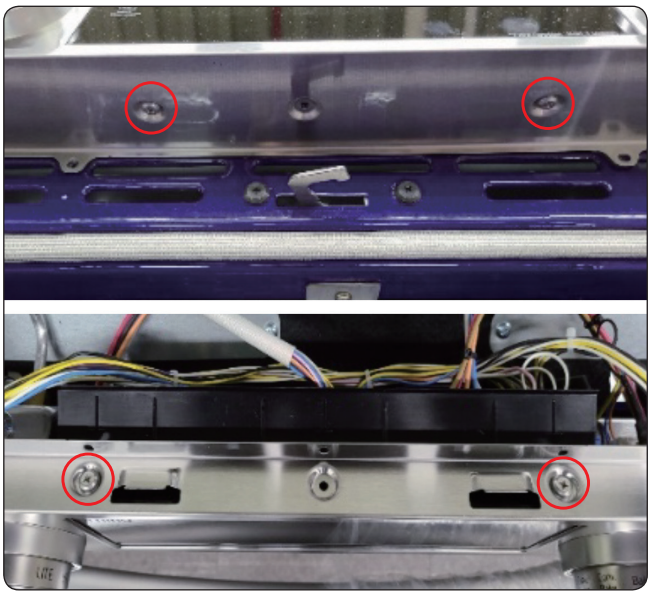

5. After disconnecting the 7 connectors, remove the PCB from the PCB supporter.

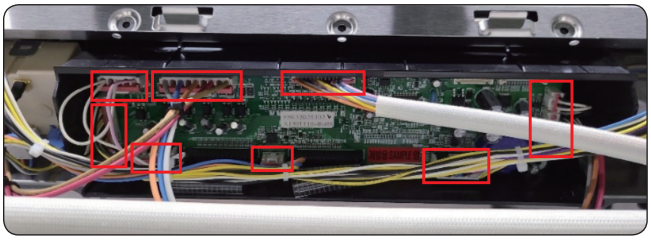

Copyright © 2021 LG Electronics Inc. All rights reserved.
Only training and service purposes

COMPONENT ACCESS

REMOVING KNOB AND INFINITE SWITCH

⚠ WARNING

- **DISCONNECT power supply cord from the outlet before servicing.**
- **Replace all panels and parts before operating.**
- **RECONNECT all grounding devices.**

- Failure to do so can result in severe personal injury, death or electrical shock.

⚠ CAUTION

- **Be careful when you work on the electric range handling the sheet metal part.**

- Sharp edge may be present and you can cut yourself.

1. Turn off the electrical supply going to the range.
2. Pull the controller from the range. (See page 3-5)
3. There are 5 Infinite switches. When you check Infinite switches, firstly check the electric test each other.
   (refer to the page 4-5 ~ 4-9)
4. To remove the Infinite switch (ex. RF switch)
   a) Disconnect the all wire to fault Infinite switch
   b) Pull out a knob from the Infinite switch shaft.

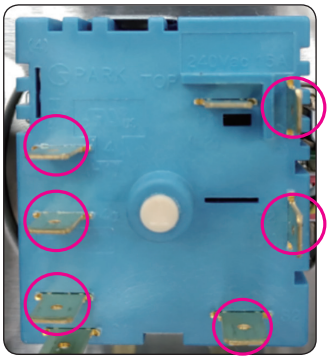



c) Remove the 2 screws of knob ring.

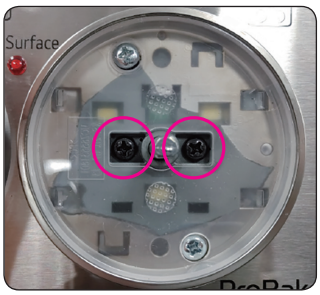

d) After replacing the infinite switch, finally check the electric and wiring.

Picture	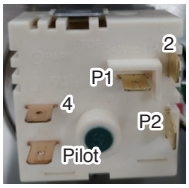 <LR,CR,RR>		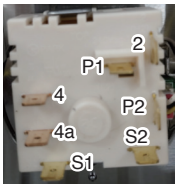 <LF>		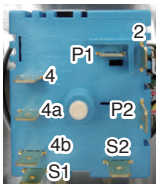 <RF>
Position	LR	CR	RR	LF	YL
P1	BK-BK	BK	YL-YL	BK	PK
P2	RD-RD	RD	RD-BK	RD-RD	RD-RD
2	RD	OR	BN	YL	YL
4	VI-RD	WH-WH	VI-WH	GY-RD	GY
4a	-	-	-	BL	BL
4b	-	-	-	-	-
Pilot	YL	WH	RD	-	OR
S1	-	-	-	RD	RD-RD
S2	-	-	-	PK	BL

Copyright © 2021 LG Electronics Inc. All rights reserved.
Only training and service purposes

COMPONENT ACCESS

REMOVING A SIDE PANEL

⚠ WARNING

- **DISCONNECT power supply cord from the outlet before servicing.**
- **Replace all panels and parts before operating.**
- **RECONNECT all grounding devices.**

- Failure to do so can result in severe personal injury, death or electrical shock.

⚠ CAUTION

- **Be careful when you work on the electric range handling the sheet metal part.**

- Sharp edge may be present and you can cut yourself.

1. Turn off the electrical supply going to the range.
2. Remove the oven door from the range (see page 3-16)
3. Pull the range away from the wall.
4. Remove the back cover of the range (see page 3-2)
5. Remove the cooktop (See page 3-4)
6. Pull the controller from the range. (see page 3-5)
7. Remove the screw from the left or right side panel.

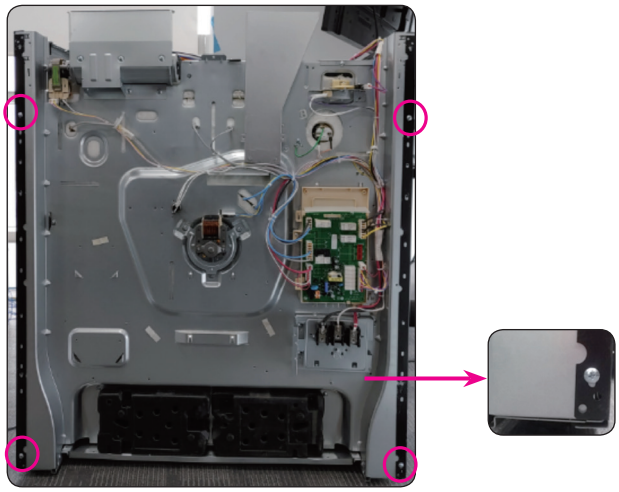

8. Pull the back of the side panel out from the range approximately 10˚

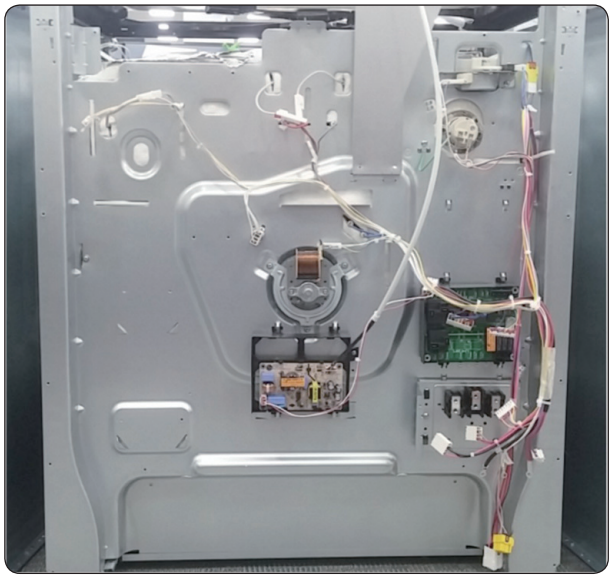

9. Push forward and remove the side panel.

Copyright © 2021 LG Electronics Inc. All rights reserved.
Only training and service purposes

COMPONENT ACCESS

REMOVING THE COOLING MOTOR, THERMAL DISK AND DOOR SWITCH

⚠ WARNING

- **DISCONNECT power supply cord from the outlet before servicing.**
- **Replace all panels and parts before operating.**
- **RECONNECT all grounding devices.**

- Failure to do so can result in severe personal injury, death or electrical shock.

⚠ CAUTION

- **Be careful when you work on the electric range handling the sheet metal part.**

- Sharp edge may be present and you can cut yourself.

1. Turn off the electrical supply going to the range.
2. Pull the range away from the wall so that you can access the rear panel.
3. Open the oven door.
4. Remove the cooktop(See page 3-4)
5. Pull the controller from the range. (See page 3-5)
6. To remove the door latch:

   a) Remove the two screws from the door latch

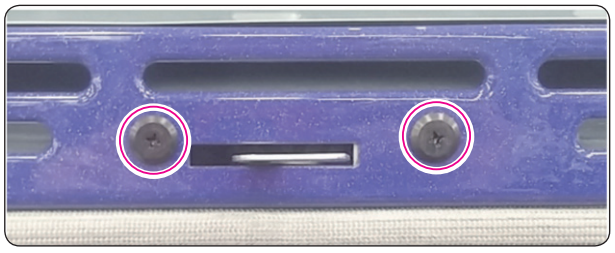

   b) Remove the 3 screws on the back panel for remove cooling motor

   c) Remove the wires from the cooling motor

   d) Remove the 3 screws on the main duct from the cooling motor

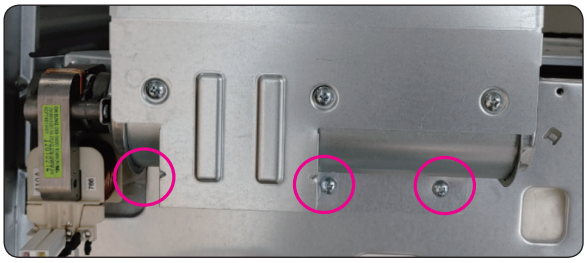

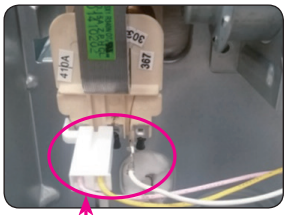

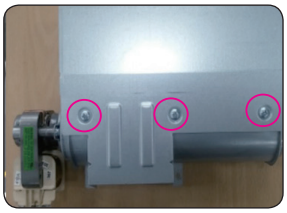

Wires

   e) To remove the main duct, remove the 3 screws on the main duct

   f) To remove the main duct, remove the 2 screws on the back panel

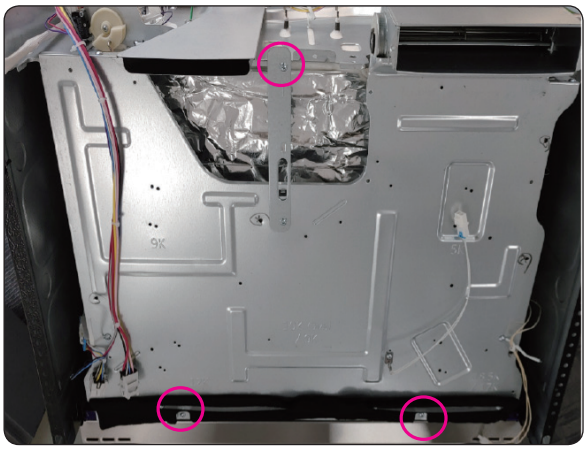

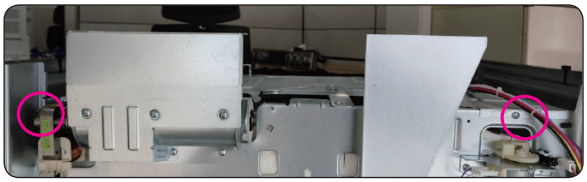

Copyright © 2021 LG Electronics Inc. All rights reserved.
Only training and service purposes

e) Remove the door latch from the burner box and unhook the actuating rod.

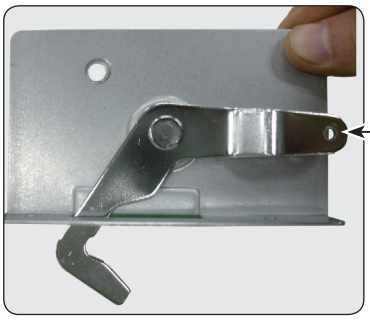

7. To remove the thermostat, remove the 1 screw and remove 2 receptacles.

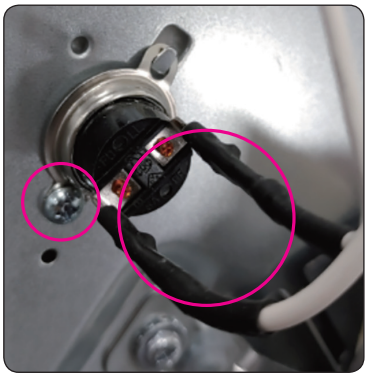

The thermostat is located on the cavity cover . It opens at 356°F/180°C and closes when the oven temperature cools below 14°F/-10°C.

8. To remove the door switch
   a) Disconnect the wires from the terminal
   b) Remove the door switch from the range. To do this, squeeze tabs and use a ratchet extension or a small socket, and tap it out of the hole with a hammer.

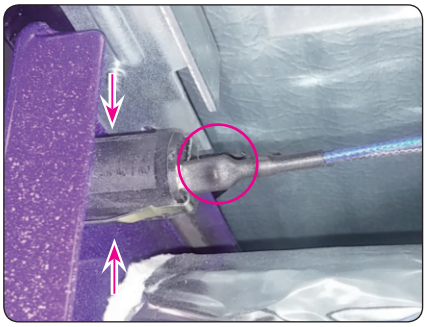

Copyright © 2021 LG Electronics Inc. All rights reserved.
Only training and service purposes

REMOVING THE BROIL ELEMENT

⚠ WARNING

- **DISCONNECT power supply cord from the outlet before servicing.**
- **Replace all panels and parts before operating.**
- **RECONNECT all grounding devices.**

- Failure to do so can result in severe personal injury, death or electrical shock.

⚠ CAUTION

- **Be careful when you work on the electric range handling the sheet metal part.**

- Sharp edge may be present and you can cut yourself.

BROIL ELEMENT (SHEATH HEATER)

1. Turn off the electrical supply going to the range.
2. Open the oven door and remove the racks from inside the oven.
3. To remove the outer broil element:
   a) Unplug 2 receptacle at each point.

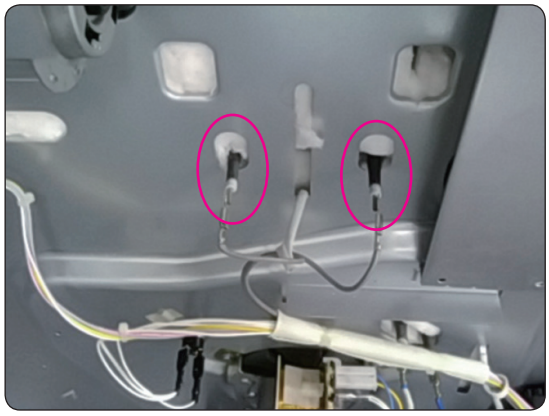

b) Remove the 4 screws from the front and rear brackets.

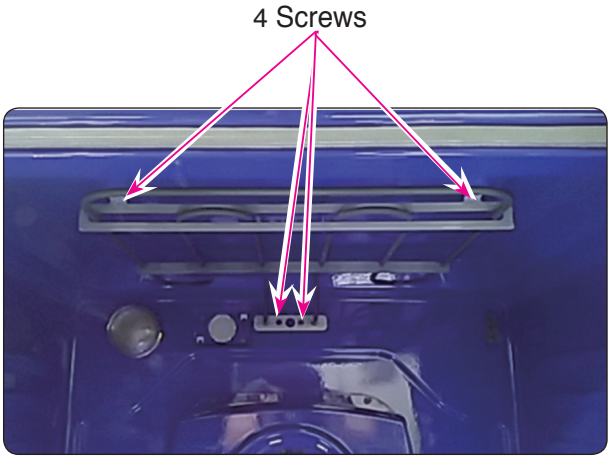

Copyright © 2021 LG Electronics Inc. All rights reserved.
Only training and service purposes

COMPONENT ACCESS

REMOVING THE CONVECTION ELEMENT, FAN BLADE AND FAN MOTOR

1. Disconnect power and remove oven racks.
2. Pull the range out of its mounting location so that you can access the rear of the unit.
3. Remove the rear panel from the unit.
   (See step 3 on page 3-2 for procedure)
4. Disconnect the wire connection.

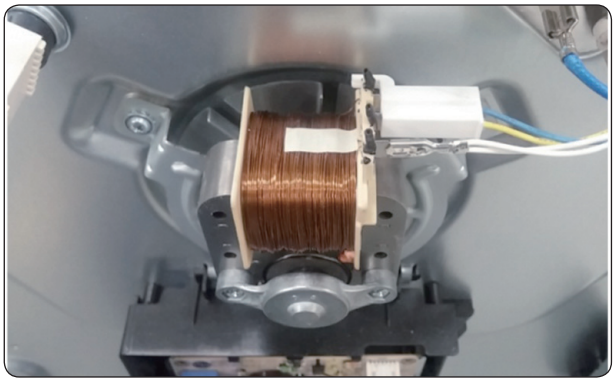

5. Remove the four Fan cover screws and set the fan cover aside.



6. Remove the two convection element screws and pull the element forward.



7. **To remove Fan blade,** remove Nut by screwing clockwise. Fan blade can be replaced from inside oven.

> **⚠ CAUTION**
>
> • **Be careful not to bend the fan blade**
> - Failure to do so can result in vibration, noise, and poor performance of convection when operating.

8. **To remove Fan motor assembly**, disconnect wire connection and remove the three bracket screws
9. Pull the fan motor assembly forward.

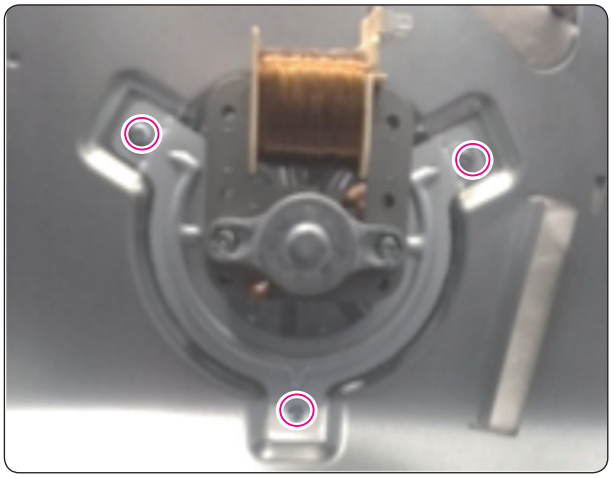

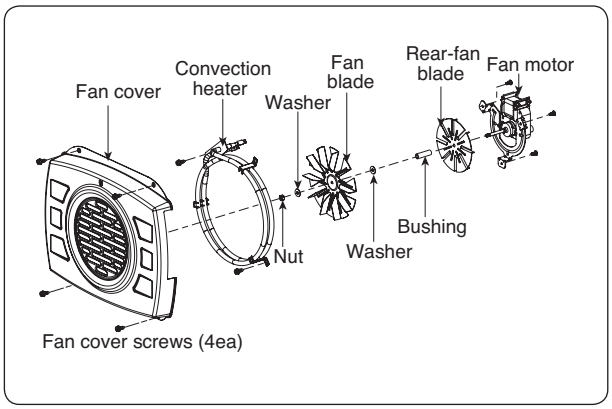

Copyright © 2021 LG Electronics Inc. All rights reserved.
Only training and service purposes

COMPONENT ACCESS

REMOVING THE OVEN LIGHT & SOCKET ASSEMBLY

⚠ WARNING

- **DISCONNECT power supply cord from the outlet before servicing.**
- **Replace all panels and parts before operating.**
- **RECONNECT all grounding devices.**

- Failure to do so can result in severe personal injury, death or electrical shock.

⚠ CAUTION

- **Be careful when you work on the electric range handling the sheet metal part.**

- Sharp edge may be present and you can cut yourself.

1. Turn off the electrical supply and gas supply going to the range.
2. Turn the glass bulb cover counterclockwise to remove.
3. Pull the bulb out of the socket.

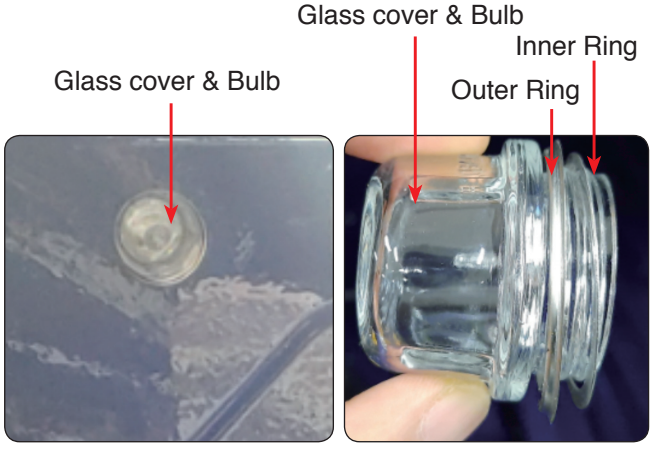

⚠ CAUTION

- **Be careful not to scratch or chip the oven liner paint when you remove the oven light socket in the next step.**

5. Use a screwdriver and bend the clips on the oven light socket away from the edges of the liner hole, and pull the socket out of the liner.
   NOTE: If it is too difficult to remove the socket from the front of the oven, you will have to push the socket out from the back of the unit.

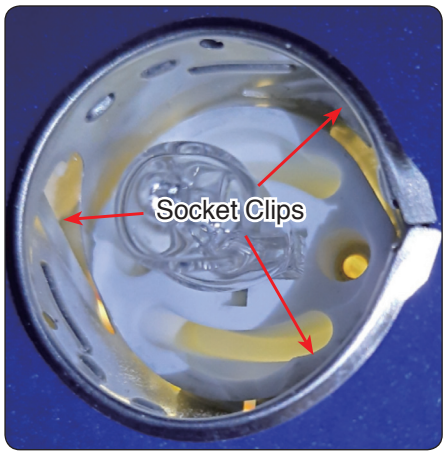

6. Disconnect the wires from the socket terminals.

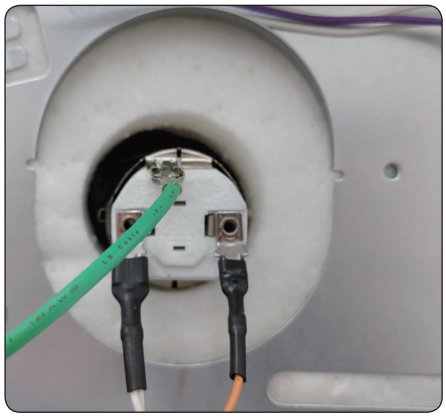

<Viewed From Rear Panel>

Copyright © 2021 LG Electronics Inc. All rights reserved.
Only training and service purposes

REMOVING THE LATCH DRIVE ASSEMBLY

⚠ WARNING

- **DISCONNECT power supply cord from the outlet before servicing.**
- **Replace all panels and parts before operating.**
- **RECONNECT all grounding devices.**

- Failure to do so can result in severe personal injury, death or electrical shock.

⚠ CAUTION

- **Be careful when you work on the electric range handling the sheet metal part.**

- Sharp edge may be present and you can cut yourself.

1. Turn off the electrical supply going to the range.
2. Pull the range away from the wall so that you can access the rear panel.
3. Remove cooktop controller and back cover. (See the page 3-2, 3-4, 3-5)
4. Disconnect the wires from the latch drive motor and switch.
5. Remove the 1 mounting screws from the latch drive.

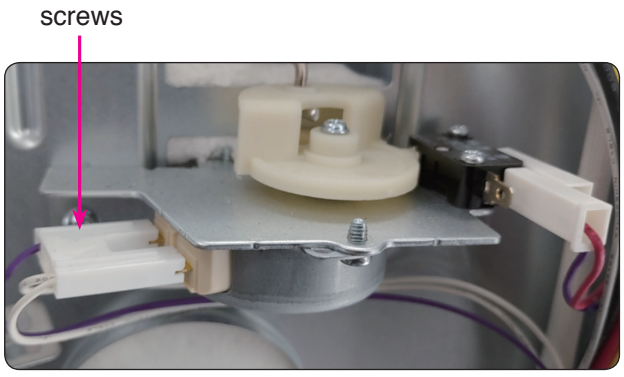

6. Unhook the Latch rod from the cam.

DOOR LOCKING MECHANISM

The door lock assembly is located at the back side of range.
The structural elements are as below.

1. When the oven control is programmed and started for the Self clean and Lock out mode, PCB (Power control board) chip operates the motor.

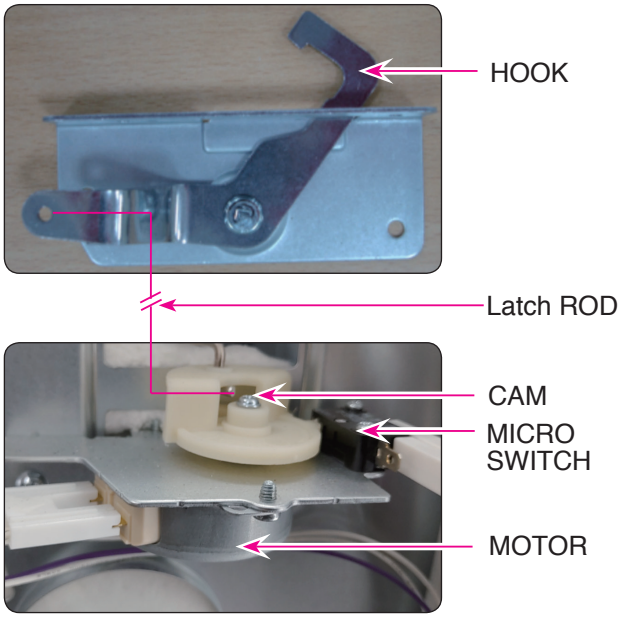

2. The cam moves the door hook connected to latch rod from unlocked position to locked position (from locked Position to unlocked position)
3. The cam activates the micro switch that causes the motor to stop.
4. The locked status remains until the range temperature drops to approximately 500F after end of the self clean or lock out feature is reactivated. The motor operates to unlock door at that time.

Copyright © 2021 LG Electronics Inc. All rights reserved.
Only training and service purposes

REMOVING THE OVEN TEMPERATURE SENSORS

⚠ WARNING

- **DISCONNECT power supply cord from the outlet before servicing.**
- **Replace all panels and parts before operating.**
- **RECONNECT all grounding devices.**

- Failure to do so can result in severe personal injury, death or electrical shock.

⚠ CAUTION

- **Be careful when you work on the electric range handling the sheet metal part.**

- Sharp edge may be present and you can cut yourself.

1. Turn off the electrical supply going to the range.
2. Open the oven door and remove the racks from the oven.
3. Pull the range away from the wall so that you can access the rear panel.
4. Remove the 14 screw from the Back cover and remove the panel(See Step on page 3-2)

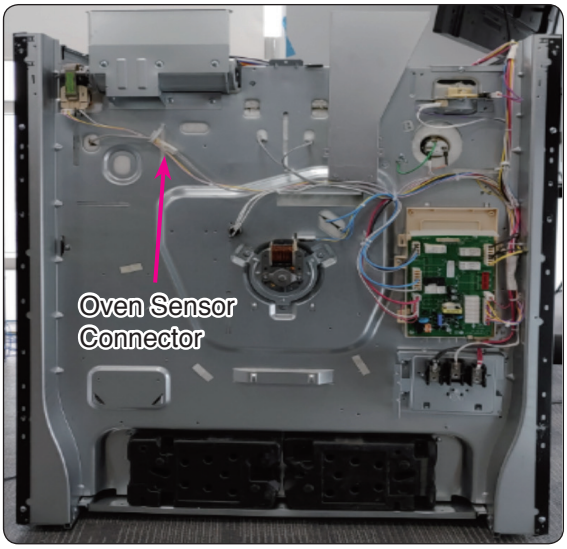

5. **To remove an oven temperature sensor,** Disconnect the connector from the main harness and remove the mounting screw in oven cavity.

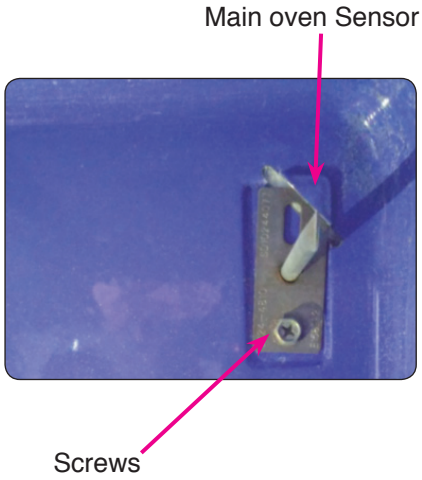

Copyright © 2021 LG Electronics Inc. All rights reserved.
Only training and service purposes

REMOVING & REPLACING THE LIT-OFF OVEN DOOR AND DRAWER

⚠ CAUTION

- **Be careful when removing and lifting the door.**
- **DO NOT lift the door by the handle.** The door is very heavy.

Removing the Door

Step. 1

Fully open the door.

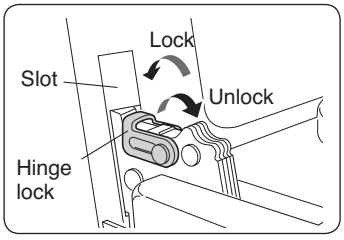

Step. 2

Unlock the hinge locks, rotating them as far toward the open door frame as they will go.

Step. 3

Firmly grasp both sides of the door at the top.

Step. 4

Close the door to the removal position (approximately five degrees) which is halfway between the broil stop position and fully closed.
If the position is correct, the hinge arms will move freely.

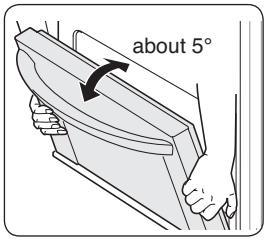

Step. 5

Lift door up and out until the hinge arms are clear of the slots.

Replacing the Door

Step. 1

Firmly grasp both sides of the door at the top.

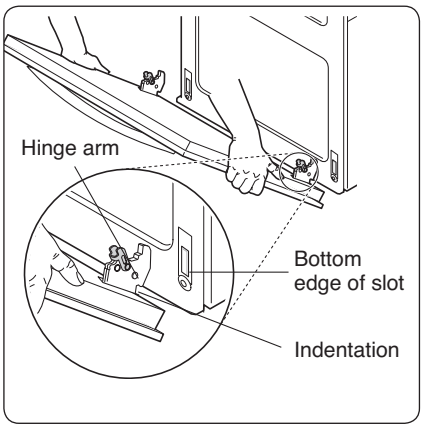

Step. 2

With the door at the same angle as the removal position, seat the indentation of the hinge arms into the bottom edge of the hinge slots. The notch in the hinge arms must be fully seated into the bottom edge of the slots.

Step. 3

Open the door fully. If the door will not open fully, the indentation is not seated correctly in the bottom edge of the slots.

Step. 4

Lock the hinge locks, rotating them back toward the slots in the oven frame until they lock.

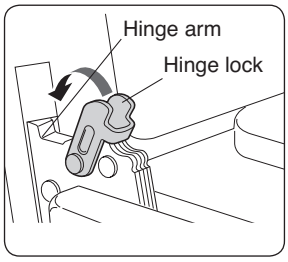

Step. 5

Close the oven door.

Copyright © 2021 LG Electronics Inc. All rights reserved.
Only training and service purposes

REMOVING & REPLACING THE LIT-OFF OVEN DOOR AND DRAWER

⚠ CAUTION

- **Disconnect the electrical power to the range at the main fuse or circuit breaker panel. Failure to do so can result in severe personal injury, death, or electrical shock.**

Removing the Drawer

Most cleaning can be done with the drawer in place; however, the drawer may be removed if further cleaning is needed. Use warm water to thoroughly clean.

Step. 1

Fully open the drawer.

Step. 2

Remove 1 screw.



Step. 3

Locate the glide lever on each side of the drawer. Push down on the left glide lever and pull up on the right glide lever.

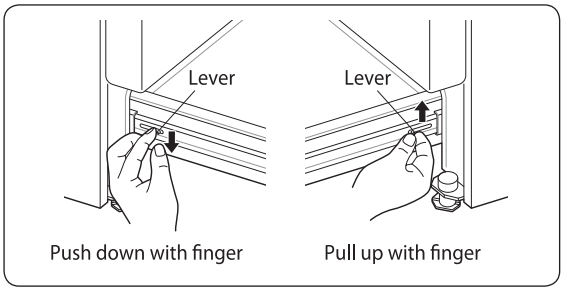

Step. 4

Pull the drawer away from the range.

Replacing the Door

Step. 1

Pull the bearing glides to the front of the chassis glide.

Step. 2

Align the glide on each side of the drawer with the glide slots on the range.

Step. 3

Push the drawer into the range until levers click (approximately 2 inch).

Step. 4

Secure 1 screw.

Step. 5

Pull the drawer open again to seat bearing glides into position.

Copyright © 2021 LG Electronics Inc. All rights reserved.
Only training and service purposes

COMPONENT ACCESS

REMOVING THE OVEN DOOR HANDLE & GLASS

⚠ WARNING

- **DISCONNECT power supply cord from the outlet before servicing.**
- **Replace all panels and parts before operating.**
- **RECONNECT all grounding devices.**

- Failure to do so can result in severe personal injury, death or electrical shock.

⚠ CAUTION

- **Be careful when you work on the gas range handling the sheet metal part.**

- Sharp edge may be present and you can cut yourself.

1. Remove the oven door from the range (see "Removing oven door" Page 3-16).
2. Place the oven door on a padded work surface with the front glass facing down.
3. Remove the 2 top door screws.



4. Remove the three bottom screws from the door liner.

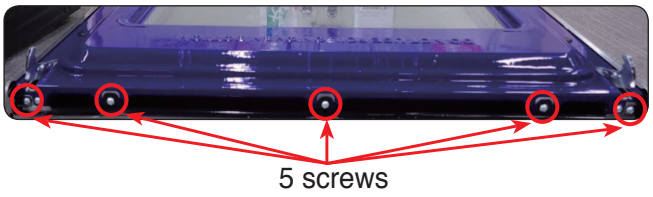

5. Lift the liner assembly off the front glass and set it aside.
6. To remove the Air guide, remove 2 screws.

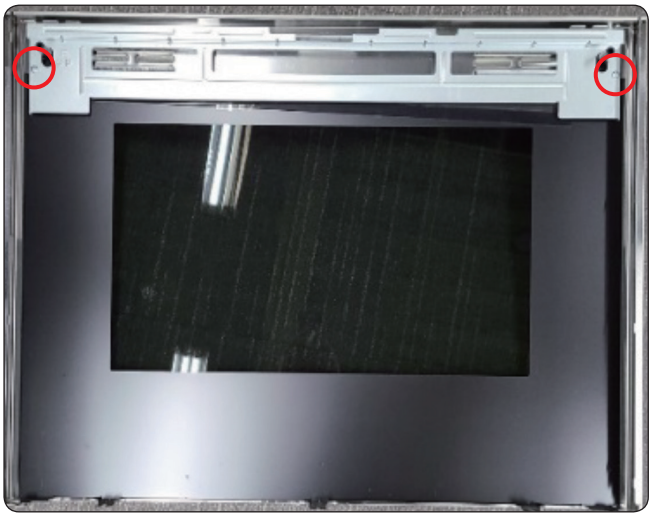

7. **To remove the door handle & trim**
   - Remove the 2 door handle screws and lift the door handle off door trim and slide up the door trim.



Copyright © 2021 LG Electronics Inc. All rights reserved.
Only training and service purposes

8. To remove a hinge hanger assembly:

a) Place the door liner assembly on a padded work surface with the hinge hangers over the edge.

b) Remove the 4 top door screws.

c) Lift the hinge hanger out of the door liner slot.



9. Lift the insulation cover, inner oven door glass and bracket assembly out of the door liner.

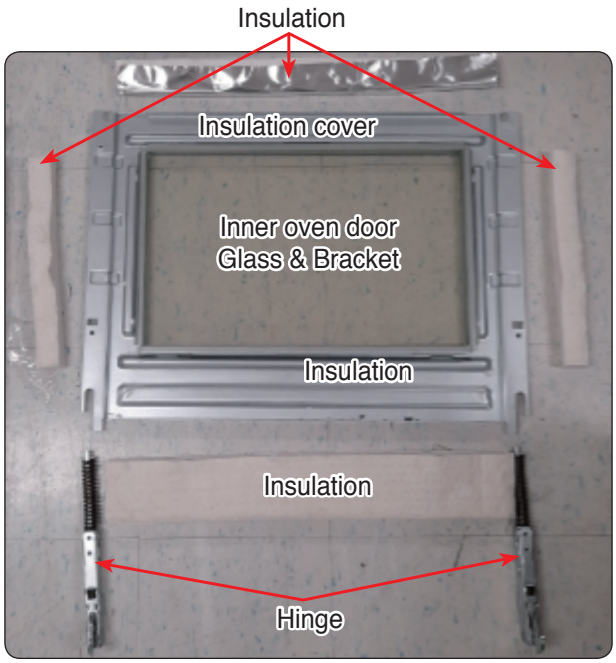



Copyright © 2021 LG Electronics Inc. All rights reserved.
Only training and service purposes

COMPONENT ACCESS

REMOVING THE OVEN DOOR GASKET

⚠ WARNING

- **DISCONNECT power supply cord from the outlet before servicing.**
- **Replace all panels and parts before operating.**
- **RECONNECT all grounding devices.**

- Failure to do so can result in severe personal injury, death or electrical shock.

⚠ CAUTION

- **Be careful when you work on the electric range handling the sheet metal part.**

- Sharp edge may be present and you can cut yourself.

1. Open the oven door to its fully down position.
2. Pull the oven door gasket clips out of the liner holes until all of the clips are removed.

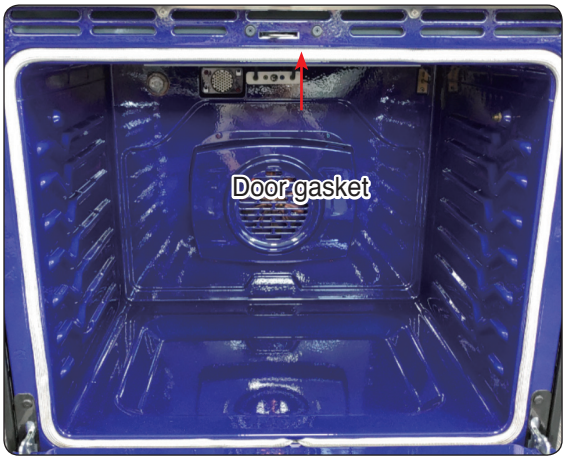

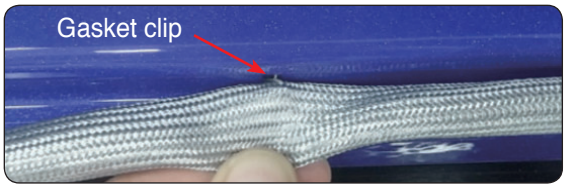

3. Pull the ends of the gasket out of the liner holes.

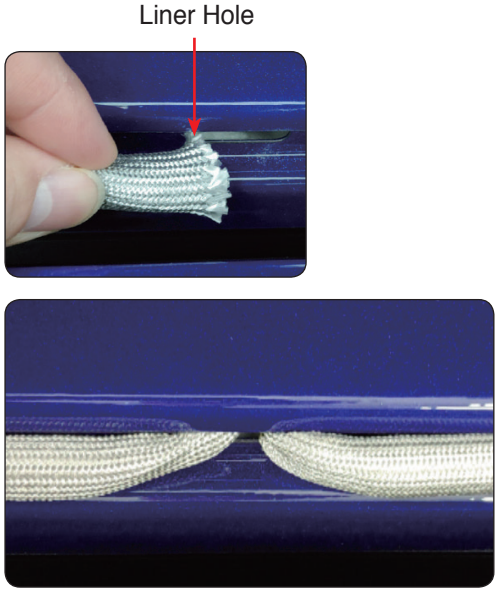

REASSEMBLY NOTE: When you install the new gasket, make sure that all of the clips are seated in their liner holes, and that the ends of the gasket are pushed fully into their holes. Use the pointed end of a pencil to push the gasket ends into the holes.

Copyright © 2021 LG Electronics Inc. All rights reserved.
Only training and service purposes

REMOVING A InstaView PCB

⚠ WARNING

- **DISCONNECT power supply cord from the outlet before servicing.**
- **Replace all panels and parts before operating.**
- **RECONNECT all grounding devices.**

- Failure to do so can result in severe personal injury, death or electrical shock.

⚠ CAUTION

- **Be careful when you work on the gas range handling the sheet metal part.**

- Sharp edge may be present and you can cut yourself.

1. Turn off the electrical supply and gas supply going to the range.
2. Remove the oven door from the range (see "Removing the Oven Door" Page 3-16).
3. Pull the range away from the wall so you can access the back of the unit.
4. Remove the back cover (see "Removing the Back Cover" Page 3-2).
5. Remove the cooktop plate (see "Removing the Cooktop Plate" Page 3-4).
6. Remove the controller panel (see "Removing the Controller Panel" Page 3-5).
7. Remove the side panel (see "Removing the Side Panel" Page 3-20).
8. Remove the 1 screw on the drawer panel front.

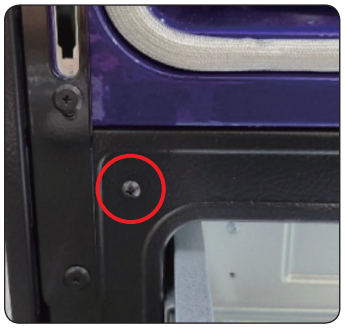

9. After removing the harness, pull out the PCB supporter.



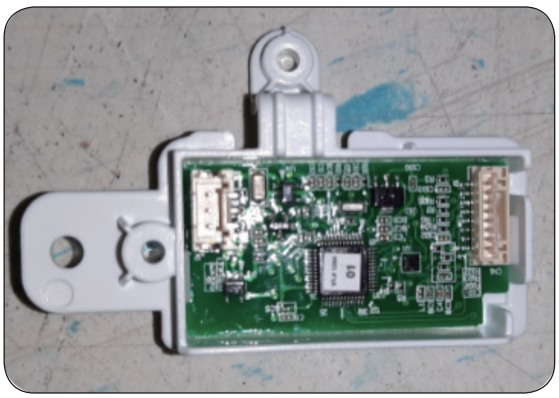

Copyright © 2021 LG Electronics Inc. All rights reserved.
Only training and service purposes

COMPONENT TEST

Before testing any of components, perform the following checks:

NOTE:
1. The most common cause for control failure is corrosion on connectors.
Therefore, disconnecting and reconnecting wires will be necessary throughout test procedures
2. ALL units in the first few days of use should be checked for mis-wiring or loose connections

1. All/tests/checks should be made with a VOM or DVM having a sensitivity of 20,000 ohms per-volt DC, or greater.
2. Check all connections before replacing components, looking for broken or loose wires, Failed terminals, or wires not pressed into connectors far enough.
3. Resistance checks must be made with power cord unplugged from outlet, and with wiring harness or connectors disconnected.

⚠ WARNING

- **Disconnect power supply cord from the outlet before servicing**
- **Replace all panels and parts before operating**
- **Reconnect all grounding devices after servicing**
- Failure to do so can result in death or electrical shock

NOTE: Below Ω value were tested at room temperature (77F/25°C)

Components	Test procedures	Results
Convection Motor	1. Refer to page 3-12 for the servicing procedure 2. Measure the resistance (Multiple meter scale: R x 1) 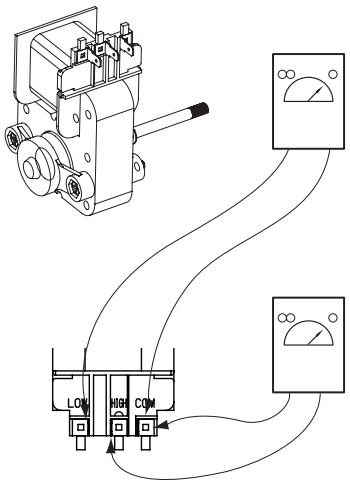	Normal: Approximately Low-COM : 30 Ω High-COM : 23.7 Ω If not replace Abnormal: Infinite (open) below 5Ω (shorted)

Copyright © 2021 LG Electronics Inc. All rights reserved.
Only training and service purposes

<table>
<tr><th>Components</th><th>Test procedures</th><th colspan="2">Results</th></tr>
<tr><td>Door locking Motor</td><td>1. Refer to page 3-14 for the servicing procedure
2. Measure the resistance
(Multiple meter scale: R x 1000)
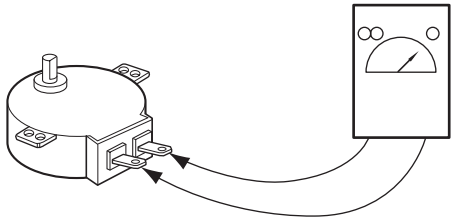</td><td colspan="2">Normal: Approximately
2.6 kΩ ± 10%
If not replace
Abnormal: Infinite(open)
below 5Ω (shorted)</td></tr>
<tr><td rowspan="2">Micro Switch
(normally open type)</td><td rowspan="2">1. Refer to page 3-14 for the servicing procedure
2. Measure the resistance
(Multiple meter scale: R x 1000)
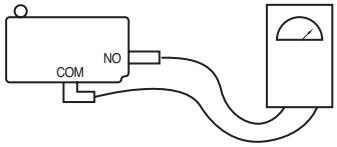</td><td>Door latch open</td><td>Door latch Locked</td></tr>
<tr><td>
Infinite</td><td>
Continuity</td></tr>
<tr><td colspan="3">NOTE: After checking for the continuity of switch, make sure that they are connected correctly</td></tr>
<tr><td rowspan="2">Oven Sensor</td><td>1. Refer to page 3-15 for the servicing procedure
2. Measure the resistance after cooling down
(Multiple meter scale: R x 1000)
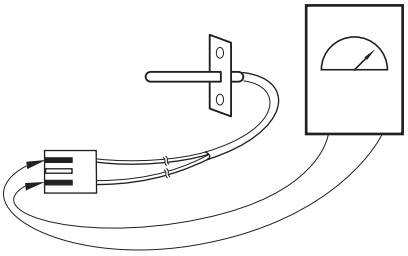</td><td colspan="2">Normal: Approximately
1.09 kΩ ± 10%
If not replace

NOTE: Ω Value was tested at room temperature (77F/25˚C)</td></tr>
<tr><td>NOTE: Oven sensor is so sensitive to temperature
Do test after cooling down sufficiently</td><td colspan="2"></td></tr>
</table>

Copyright © 2021 LG Electronics Inc. All rights reserved.
Only training and service purposes

<table>
<tr><th>Components</th><th>Test procedures</th><th colspan="2">Results</th></tr>
<tr><td rowspan="2">Door switch</td><td rowspan="2">1. Refer to page 3-9 for the servicing procedure
2. Measure the resistance after cooling down
(Multiple meter scale: R x 1000)
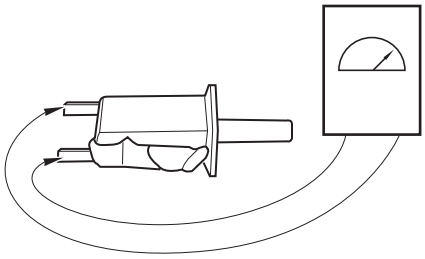</td><td>Door open</td><td>Door closed</td></tr>
<tr><td>
Continuity</td><td>
Infinite</td></tr>
<tr><td>Broil heater
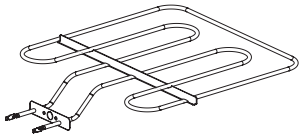</td><td>1. Refer to page 3-10 for the servicing procedure
2. Measure the resistance after cooling down
(Multiple meter scale : R x 1)
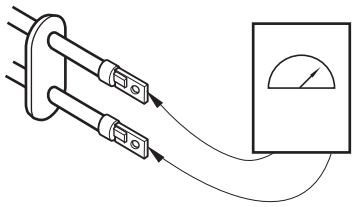</td><td colspan="2">Normal: Approximately
23 Ω ± 10%
If not replace

NOTE: Ω Value was tested at room temperature (77F/25˚C)
Be careful the element is sensitive to temperature.</td></tr>
<tr><td>Convection heater
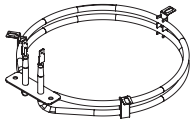</td><td>1. Refer to page 3-12 for the servicing procedure
2. Measure the resistance after cooling down
(Multiple meter scale : R x 1)
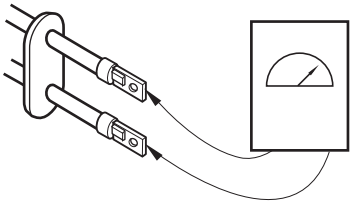</td><td colspan="2">Normal: Approximately
13.5 Ω ± 10%
If not replace

NOTE: Ω Value was tested at room temperature (77F/25˚C)
Be careful the element is sensitive to temperature.</td></tr>
<tr><td>Oven lamp</td><td>1. Measure the resistance after cooling down
(Multiple meter scale: R x1)
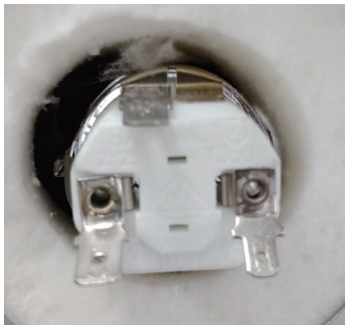</td><td colspan="2">Normal: Below 5 Ω.
If not replace</td></tr>
</table>

Copyright © 2021 LG Electronics Inc. All rights reserved.
Only training and service purposes

Components	Test procedures	Results
Infinite switch (Single units): LR switch RR switch CR switch 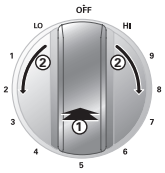 	1. Refer to page 3-6 for the servicing procedure. 2. Set the Multiple meter scale to the R x 1000. 3. Disconnect all wires from infinite switch. 4. When turn on/turn off the knob, position measure the resistance between P1 to 2. 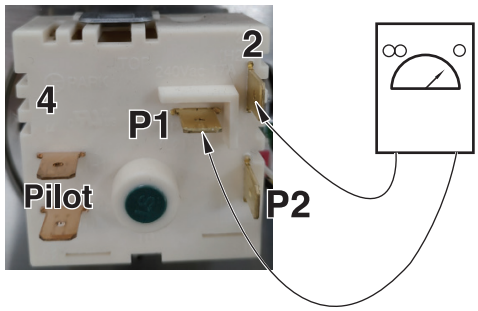 5. When turn on/turn off the knob, position measure the resistance between L2 to H2. 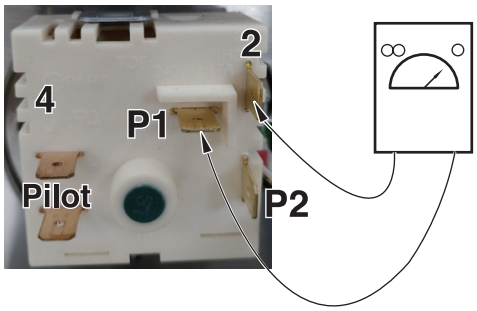 	

	Infinite Switch	Knob Position	Results	
Single type	LR/RR/ CR	Off	P1 to 2	Infinite(open circuit)
			P2 to 4	Infinite(open circuit)
		On	P1 to 2	Continuity(short circuit)
			P2 to 4	Continuity(short circuit)

Copyright © 2021 LG Electronics Inc. All rights reserved.
Only training and service purposes

Components	Test procedures	Results
Infinite switch (Double units): LF,RF switch 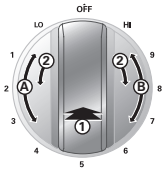	1. Refer to page 3-6 for the servicing procedure. 2. Set the Multiple meter scale to the R x 1000. 3. Disconnect all wires from infinite switch. 4. Push in and turn left knob to check the single type. 5. When turn on/turn off the knob, position measure the resistance between P1 to 2. 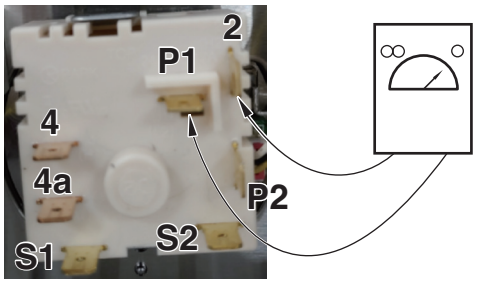 6. When turn on/turn off the knob, position measure the resistance between P2 to 4 and P2 to 4a. 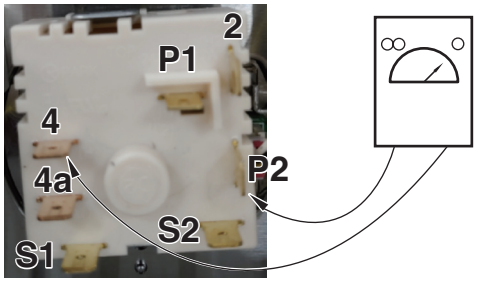 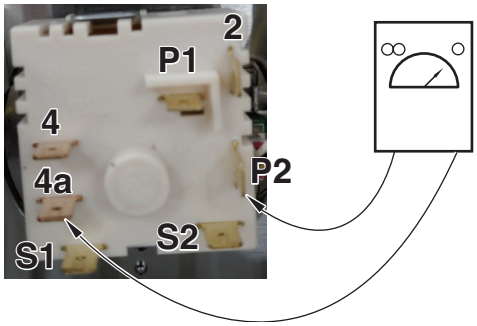	

Copyright © 2021 LG Electronics Inc. All rights reserved.
Only training and service purposes

Components	Test procedures	Results
Infinite switch (Double units): LF switch	8. After check the single type, check the dual type at the same procedure.	

	Infinite Switch	Knob Position	Results	
Dual type	LF	Off	P1 - 2	Infinite (open circuit)
			P2 - 4	Infinite(open circuit)
			P2 - 4a	Infinite (open circuit)
		On (Single)	P1 - 2	Continuity (short circuit)
			P2 - 4	Continuity (short circuit)
			P2 - 4a	Infinite (open circuit)
		On (Dual)	P1 - 2	Continuity (short circuit)
			P2 - 4	Continuity (short circuit)
			P2 - 4a	Continuity (short circuit)

Copyright © 2021 LG Electronics Inc. All rights reserved.
Only training and service purposes

Components	Test procedures	Results
Infinite switch (Triple units): RF switch 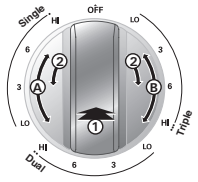	1. Refer to page 3-6 for the servicing procedure. 2. Set the Multiple meter scale to the R x 1000. 3. Disconnect all wires from infinite switch. 4. Push in and turn left knob to check the single type. 5. When turn on/turn off the knob, position measure the resistance between P1 to 2. 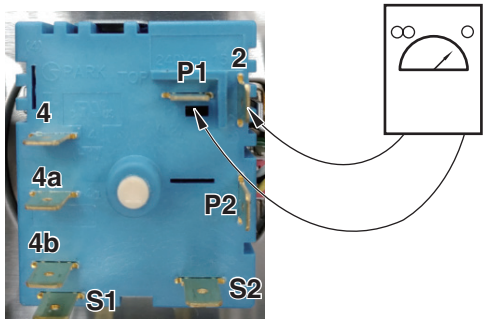 6. When turn on/turn off the knob, position measure the resistance between P2 to 4. 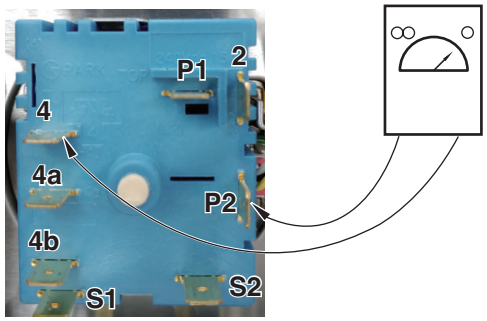 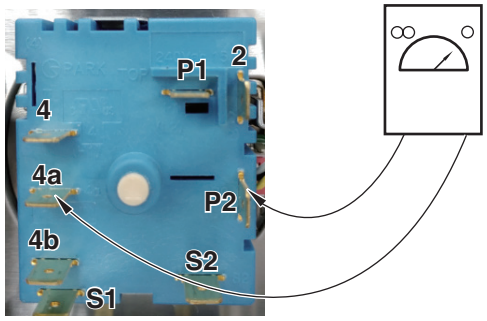	

Copyright © 2021 LG Electronics Inc. All rights reserved.
Only training and service purposes

Components	Test procedures	Results
Infinite switch (Triple units): RF switch	7. When turn on/turn off the knob, position measure the resistance between S1 to S2 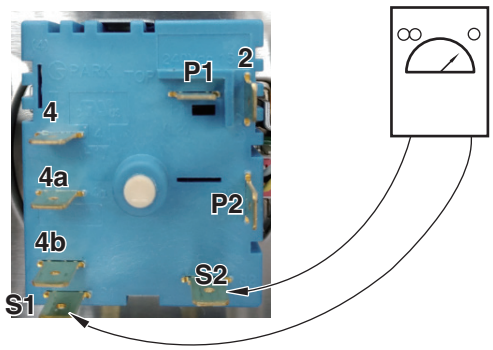 8. When turn on/turn off the knob, position measure the resistance between P2 to 4b 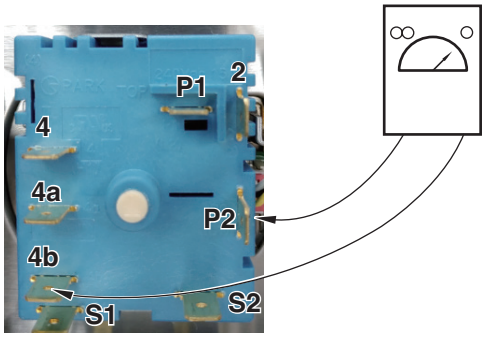 9. After check the single type, check the dual type at the same procedure.	Normal: Approximately 570 Ω, If not replace Below 150˚F → open circuit(infinite). Above 150˚F → continuity (0 Ω)

	Infinite Switch	Knob Position	Results	
Triple type	LF	OFF	P2 – 4b	Infinite(open circuit)
		ON	P2 – 4b	Continuity(short circuit)
		Others are same as dual circuits		

Copyright © 2021 LG Electronics Inc. All rights reserved.
Only training and service purposes

Components	Test procedures	Results
Single surface units: Left Rear (LR) and Right Rear(RR) Element	1. Refer to page 3-7 for the servicing procedure 2. Set the Multiple meter scale to the R x 1 3. Disconnect wires from cook-top elements 4. Touch the ohmmeter test leads to the element terminal 1A and 2A. The meter should indicate 46 Ω ± 10% 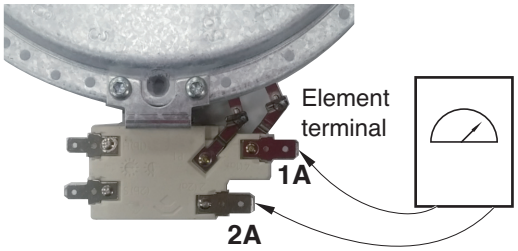 5. Touch the ohmmeter test leads to limiter terminals 1B and 2B. With the temperature below 150˚F, the meter should indicate an open circuit(infinite). With the temperature above 150˚F, the meter should indicate continuity (0Ω). 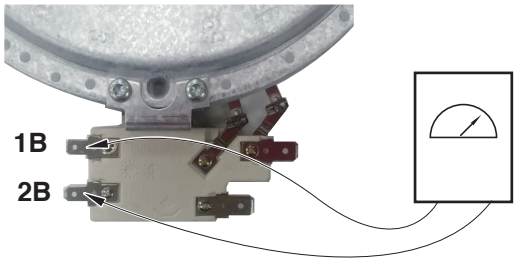 	Normal: Approximately 46 Ω, If not replace Below 150˚F → open circuit(infinite). Above 150˚F → continuity (0 Ω)

Copyright © 2021 LG Electronics Inc. All rights reserved.
Only training and service purposes

Components	Test procedures	Results
Center Rear(CR) Element : Warming Zone (Plane Heater)	1. Refer to page 3-7 for the servicing procedure 2. Set the Multiple meter scale to the R x 1 3. Disconnect wires from cook-top elements 4. Touch the ohmmeter test leads to the element terminal E1 and E2. The meter should indicate 570Ω ± 10% 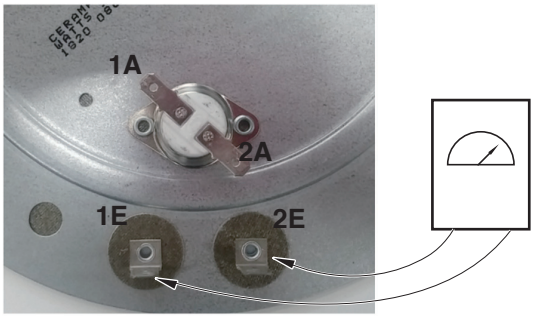 5. Touch the ohmmeter test leads to limiter terminals 1A and 2A With the temperature below 150˚F, the meter should indicate an open circuit(infinite). With the temperature above 150˚F, the meter should indicate continuity (0Ω). 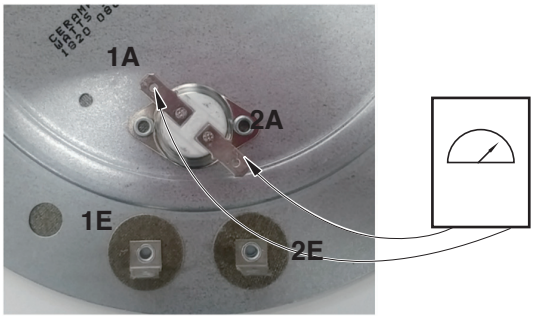	Normal: Approximately 570 Ω, If not replace Below 150˚F → open circuit(infinite). Above 150˚F → continuity (0 Ω)

Copyright © 2021 LG Electronics Inc. All rights reserved.
Only training and service purposes

Components	Test procedures	Results
Dual surface units: Left Front(LF) Element	1. Refer to page 3-7 for the servicing procedure 2. Set the Multiple meter scale to the R x1 3. Disconnect wires from cook-top elements 4. Touch the ohmmeter test leads to the (E1 & 1A) and (E2 & 1A) the meter should indicate : - (E1 & 1A) → 38 Ω ± 10% - (E2 & 1A) → 30 Ω ± 10% 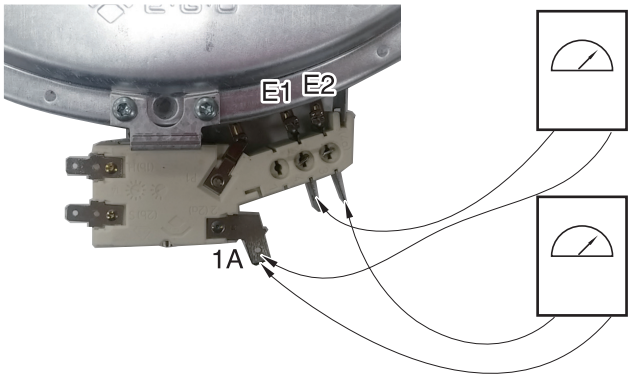	Normal: Approximately 38 Ω Normal: Approximately 30 Ω
	5. Touch the ohmmeter test leads to limiter terminals 1B and 2B. With the temperature below 150˚F, the meter should indicate an open circuit(infinite). With the temperature above 150˚F, the meter should indicate continuity (0 Ω). 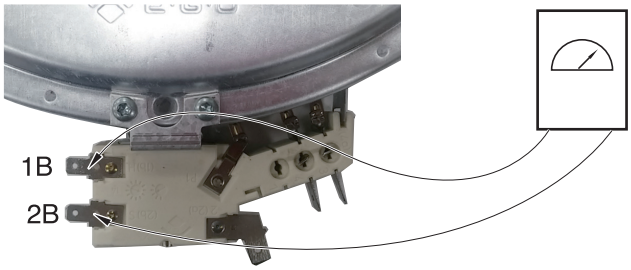	Below 150˚F → open circuit (infinite). Above 150˚F → continuity (0 Ω)

Copyright © 2021 LG Electronics Inc. All rights reserved.
Only training and service purposes

Components	Test procedures	Results
Triple surface unit: Right Front(RF) Element	1. Refer to page 3-8 for the servicing procedure 2. Set the Multiple meter scale to the R x 1 3. Disconnect wires from cook-top elements 4. Touch the ohmmeter test leads to the (E1 & 1A) and (E2 & 1A) and (E3 & 1A) The meter should indicate. - (E3 & 1A) → 52 Ω ± 10% - (E2 & 1A) → 52 Ω ± 10% - (E1 & 1A) → 64 Ω ± 10% 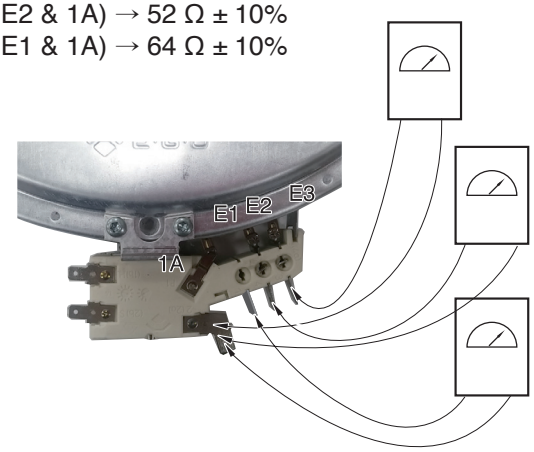 5. Touch the ohmmeter test leads to limiter terminals 1A and 2A. The meter should indicate continuity(0Ω) 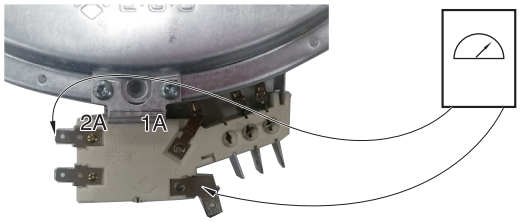 6. Touch the ohmmeter test leads to limiter terminals 1B and 2B. With the temperature below 150 ˚F, the meter should indicate an open circuit(infinite). With the temperature above 150 ˚F, the meter should indicate continuity (0Ω). 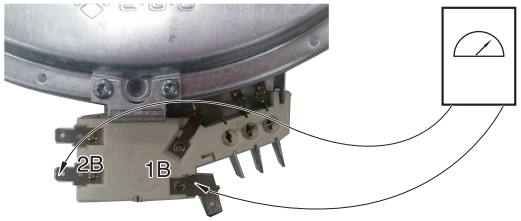	Normal: Approximately 52 Ω Normal: Approximately 52 Ω Normal: Approximately 64 Ω Normal: Continuity (below 0.5 Ω) If not replace Below 150˚F → open circuit(infinite). Above 150˚F → continuity (0 Ω)

Copyright © 2021 LG Electronics Inc. All rights reserved.
Only training and service purposes

SCHEMATIC DIAGRAM

⚠ WARNING

POWER MUST BE DISCONNECTED BEFORE SERVICING THE APPLIANCE. FAILURE TO DO SO CAN RESULT IN DEATH OR ELECTRICAL SHOCK.

NOTE:
Schematic diagram shows oven door opened and unlocked.All elements are set to “OFF”.

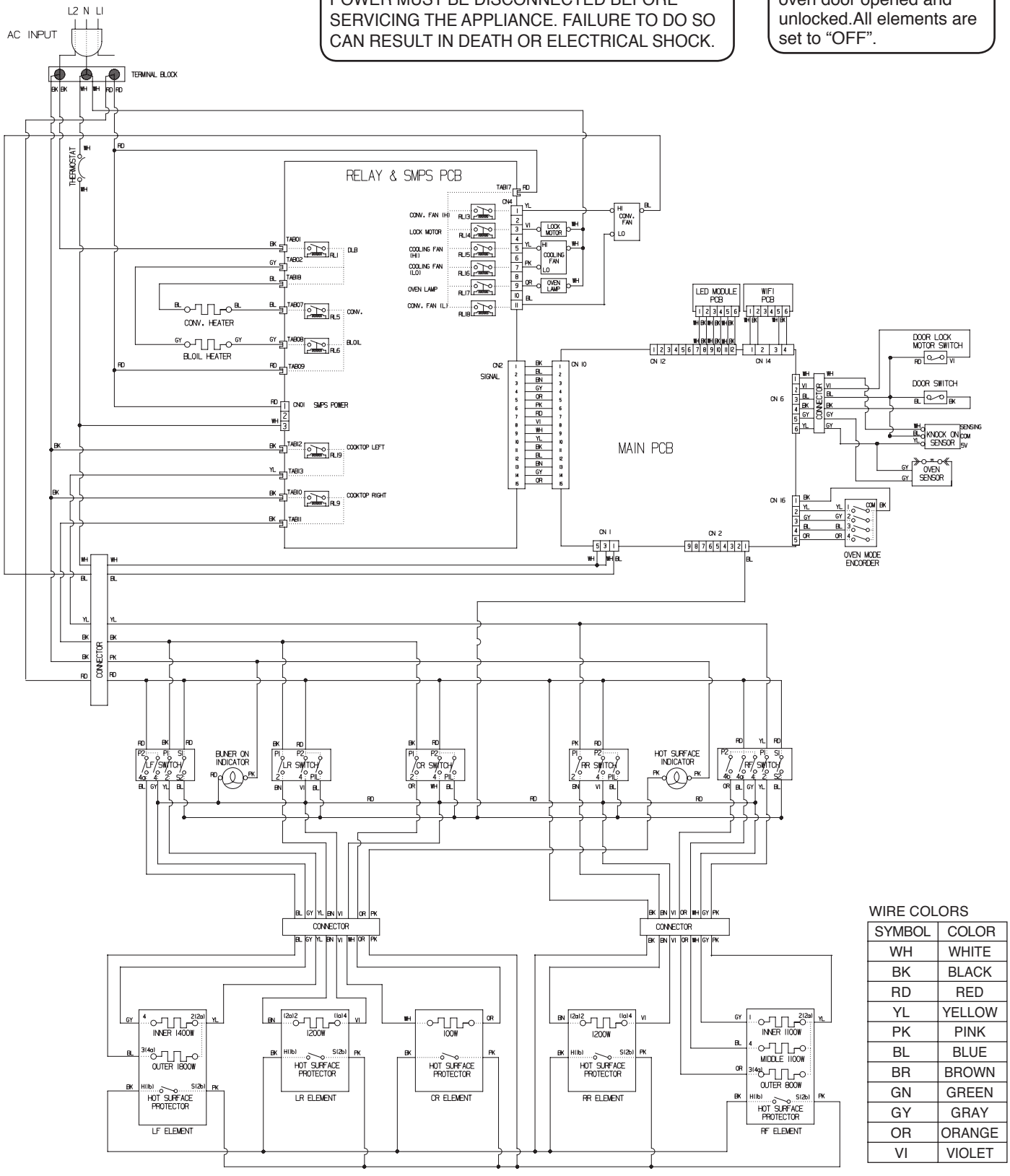

WIRE COLORS

SYMBOL	COLOR
WH	WHITE
BK	BLACK
RD	RED
YL	YELLOW
PK	PINK
BL	BLUE
BR	BROWN
GN	GREEN
GY	GRAY
OR	ORANGE
VI	VIOLET

Copyright © 2021 LG Electronics Inc. All rights reserved.
Only training and service purposes

STRIP CIRCUITS

Complete the following steps before checking electric oven circuit :

1.Check the line voltage, household fuse or circuit breaker.
2.Check for loose wiring or mis-wiring within electric range.
NOTE: The following individual circuits are for use in diagnosis, and are shown in the ON position.

For Model: LSEL6335F/LSEL6335D

BAKE / CONV. BAKE / CONV. ROAST

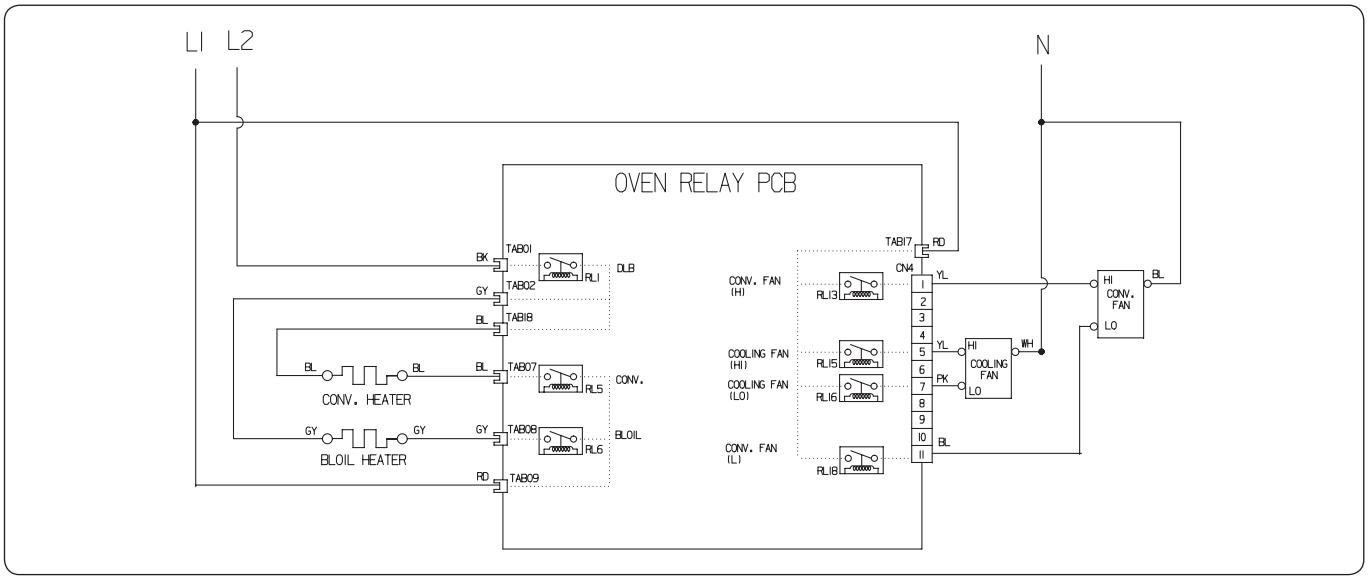

SELF CLEANING

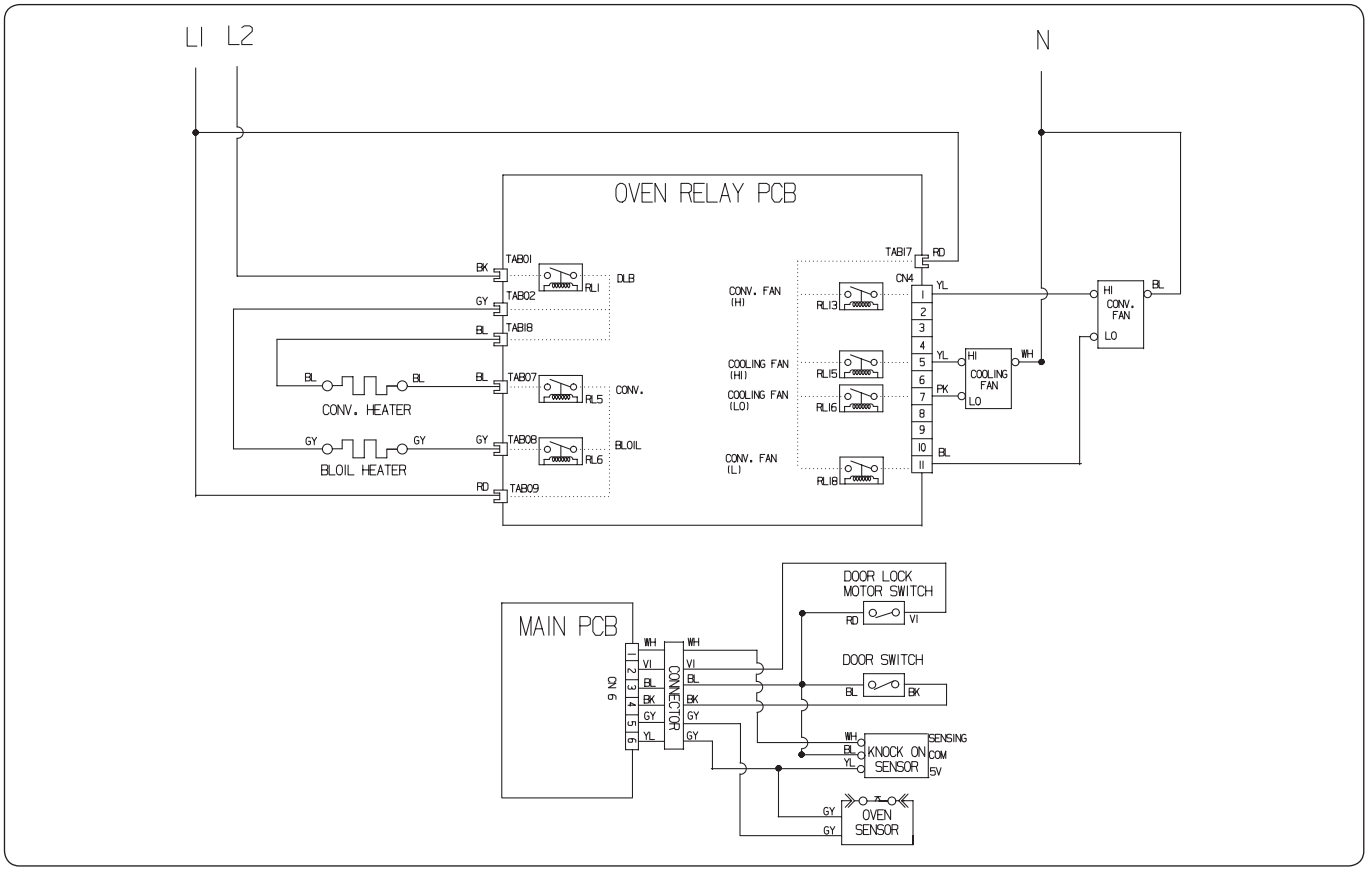

Copyright © 2021 LG Electronics Inc. All rights reserved.
Only training and service purposes

BROIL

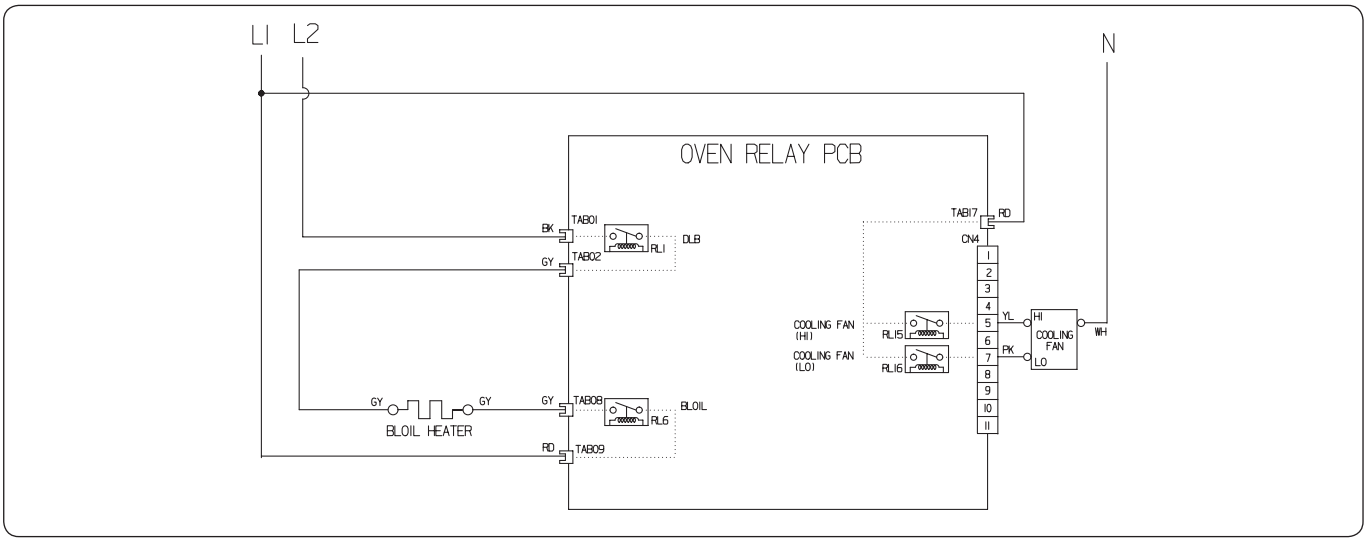

WARM / PROOF / EASY CLEAN

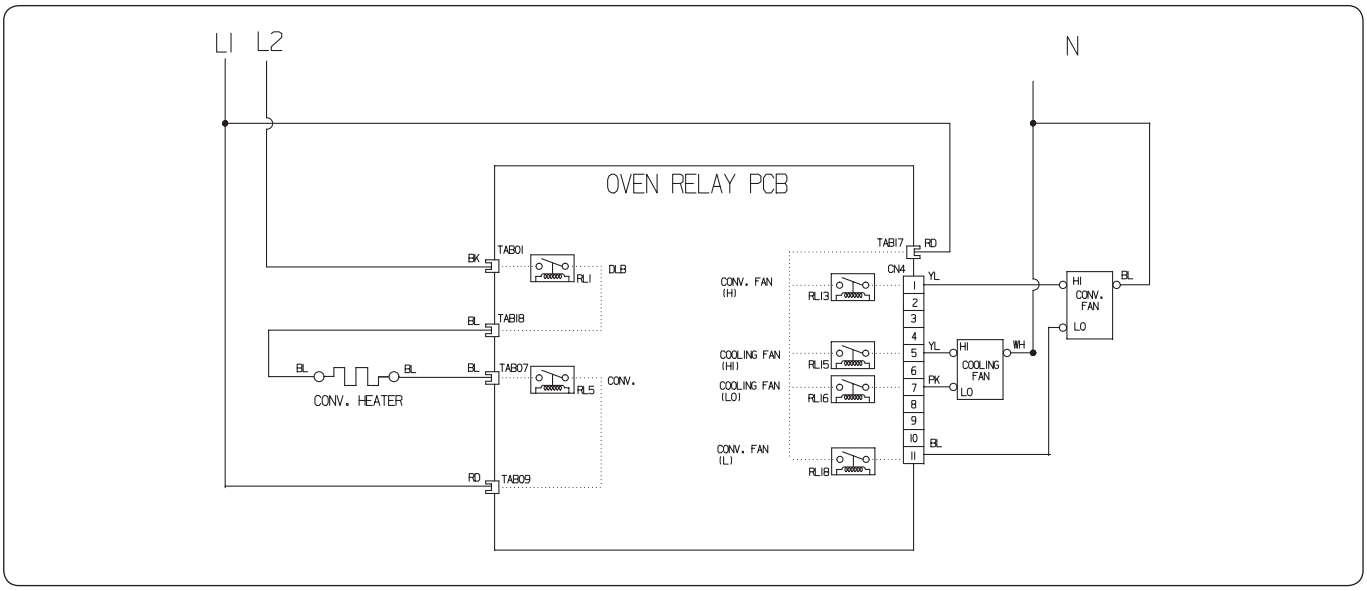

HEATING ELEMENT

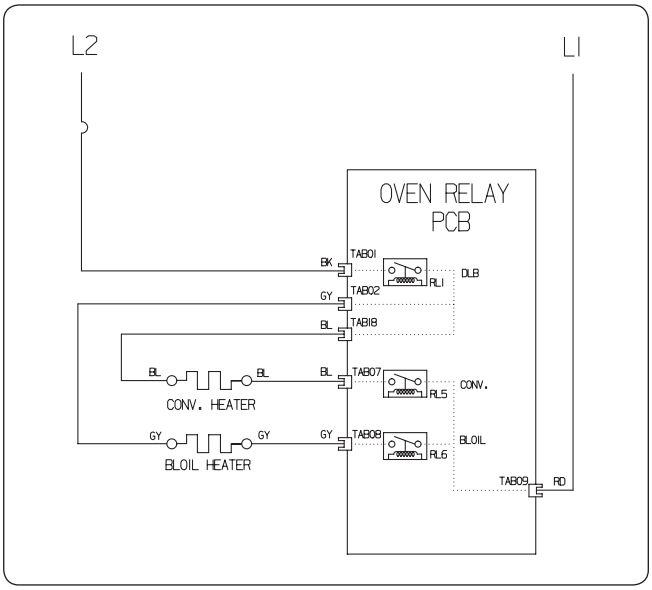

STALLED FAN & TEMP PROBE

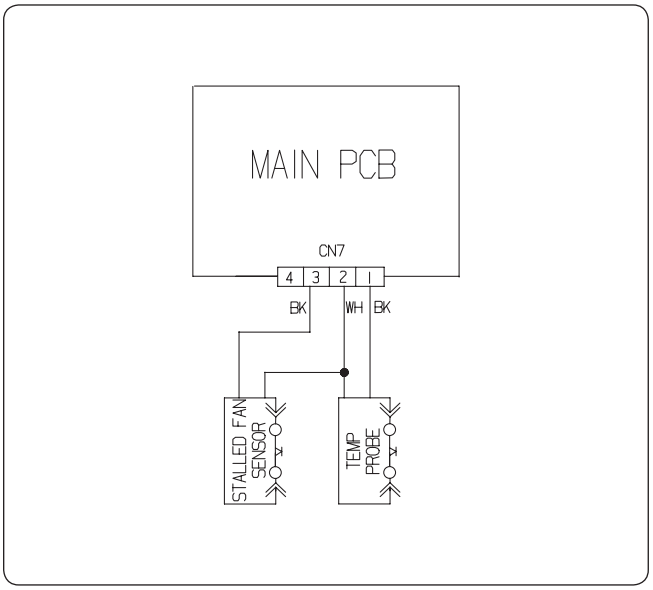

Copyright © 2021 LG Electronics Inc. All rights reserved.
Only training and service purposes

OVEN LIGHT

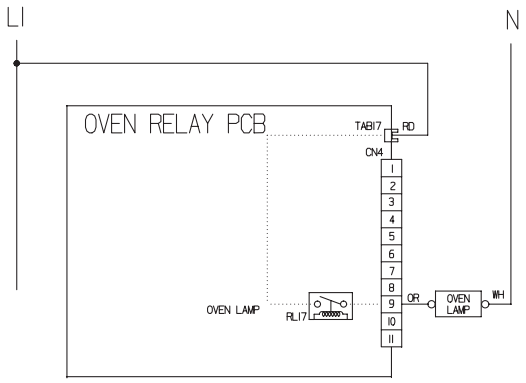

CR COOK-TOP ELEMENT

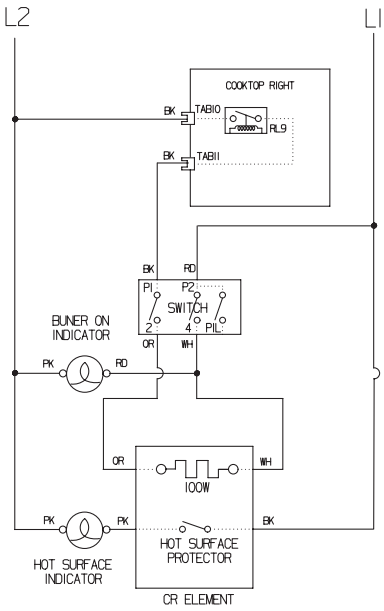

LR & RR COOK-TOP ELEMENT

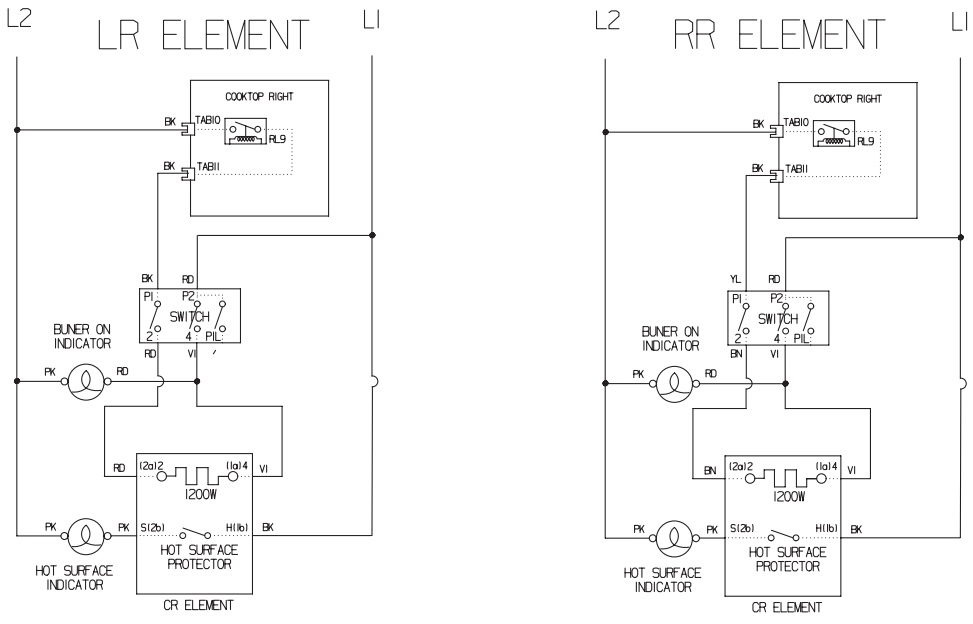

Copyright © 2021 LG Electronics Inc. All rights reserved.
Only training and service purposes

LF COOK-TOP ELEMENT

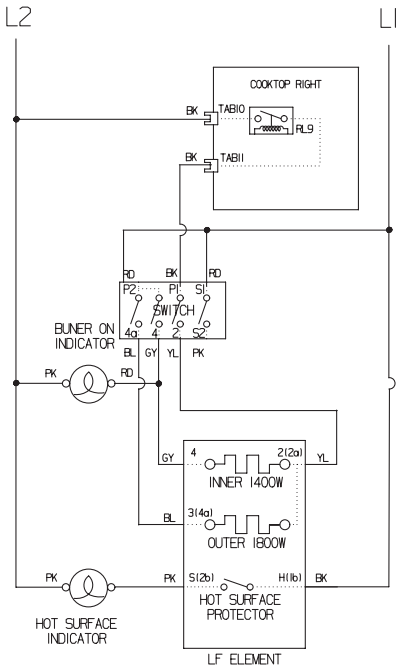

RF COOK-TOP ELEMENT

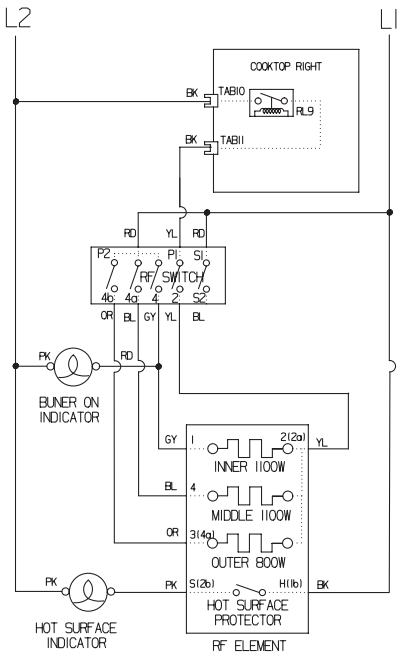

Copyright © 2021 LG Electronics Inc. All rights reserved.
Only training and service purposes

COMPOSITION OF CONTROL

Front



Back

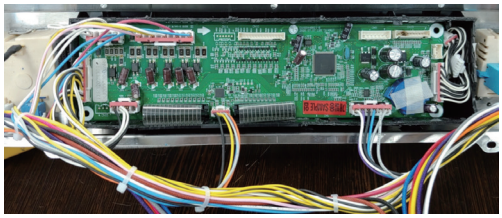



Controller assembly

Main PCB (P/N : EBR32028303)

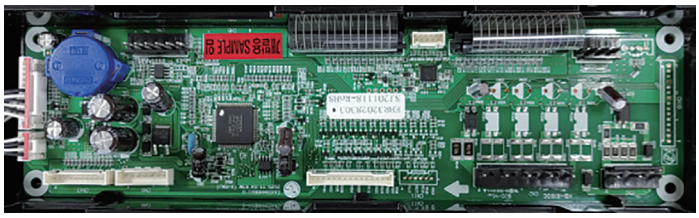

Power PCB(P/N : EBR31737803)

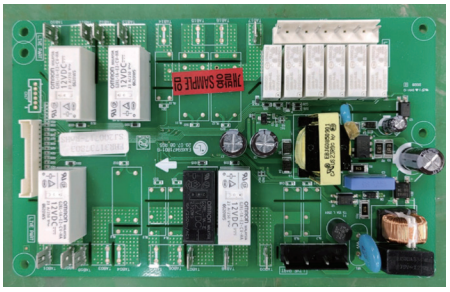

LED Module(P/N : EAV64012007)



Touch film(P/N : MFM64499201)

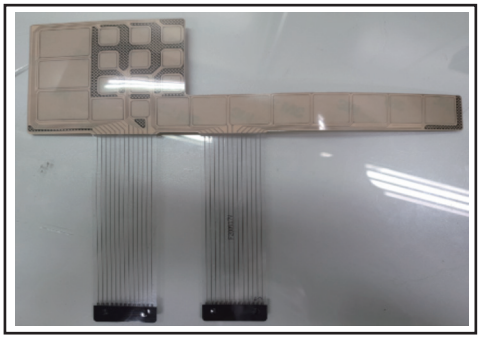

Wifi PCB(P/N : EBR85871801)



Copyright © 2021 LG Electronics Inc. All rights reserved.
Only training and service purposes

COMPOSITION OF CONTROL

Main PCB

(P/N : EBR32028303)



Power PCB

(P/N : EBR31737803)

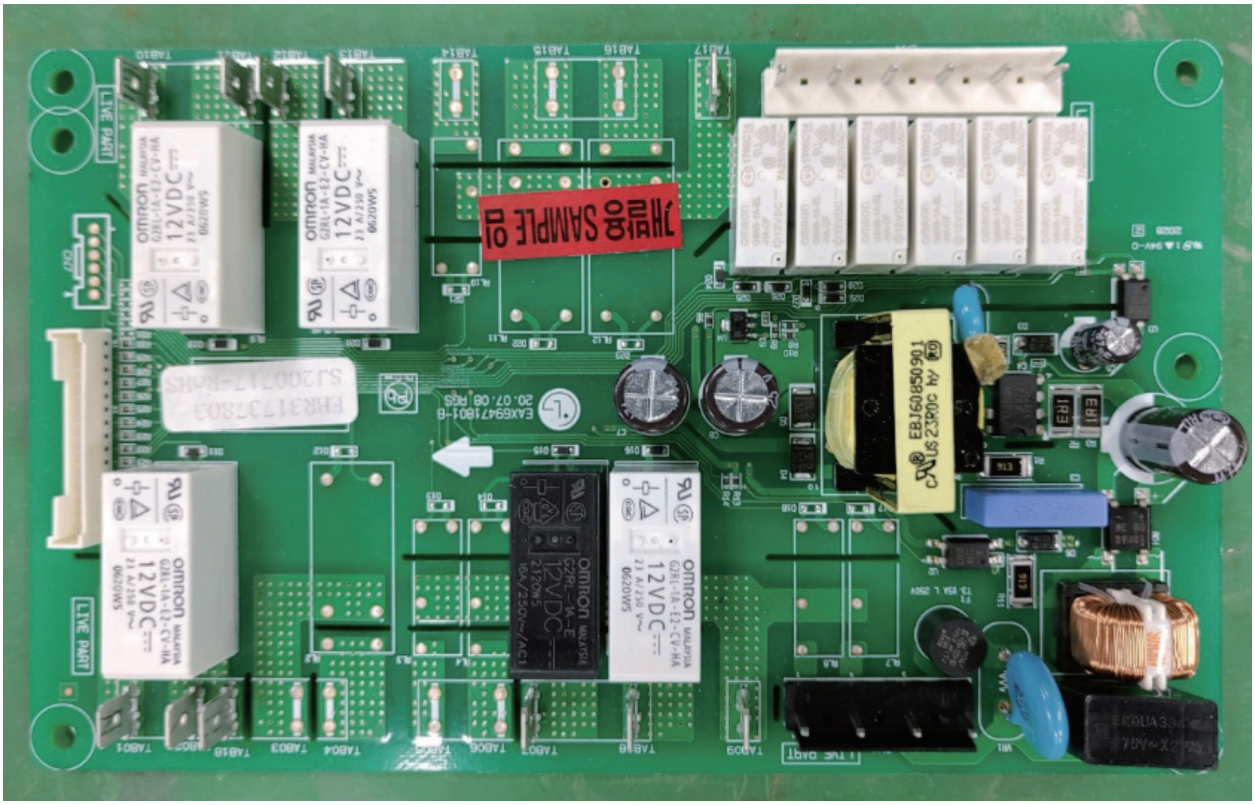

Copyright © 2021 LG Electronics Inc. All rights reserved.
Only training and service purposes

COMPOSITION OF CONTROL

LED Module

(P/N : EAV64012007)



Touch film

(P/N : MFM64236702)

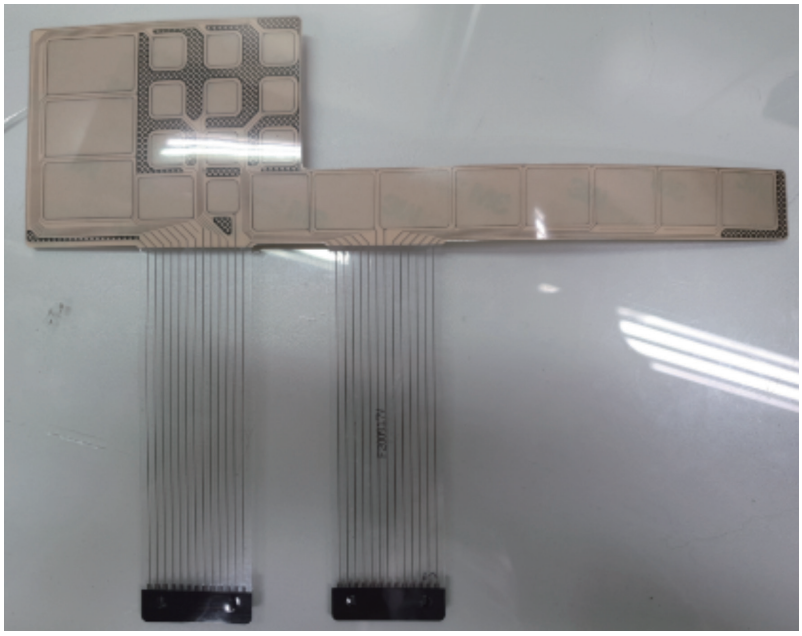

Wifi PCB

(P/N : EBR85871801)

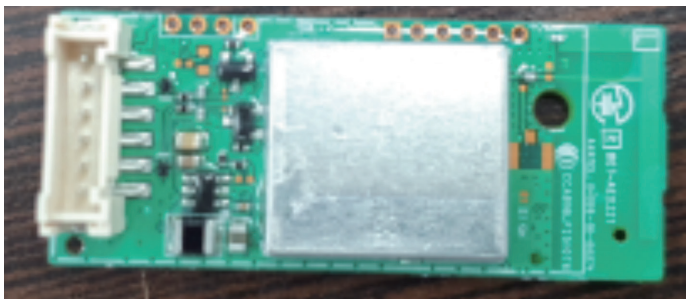

Copyright © 2021 LG Electronics Inc. All rights reserved.
Only training and service purposes

SVC TEST MODE

Sequence of SVC Test Mode

▮ To enter the test mode, follow these steps:

1. Press the any button, and Mode knob is placed in the Off
2. Press the "4" and "6" key at the same time for 1 second.



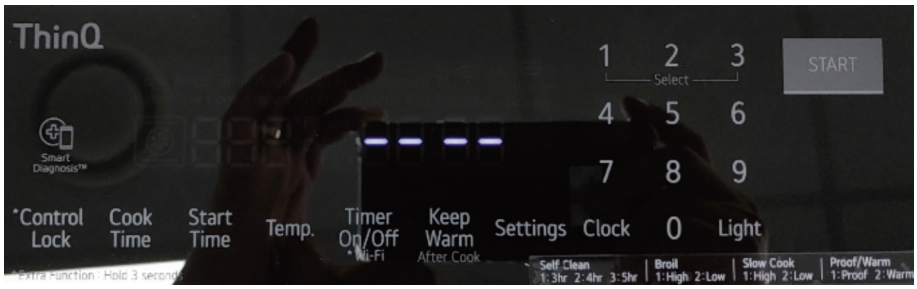

3. Press the "4" and "6" key at the same time for 1 second again.



4. Select the ‘t0’ by press the 0 button.



Copyright © 2021 LG Electronics Inc. All rights reserved.
Only training and service purposes

5. Whenever you input the START button, the relay operation sequence should be as seen below.

※ Relay Operation Sequence

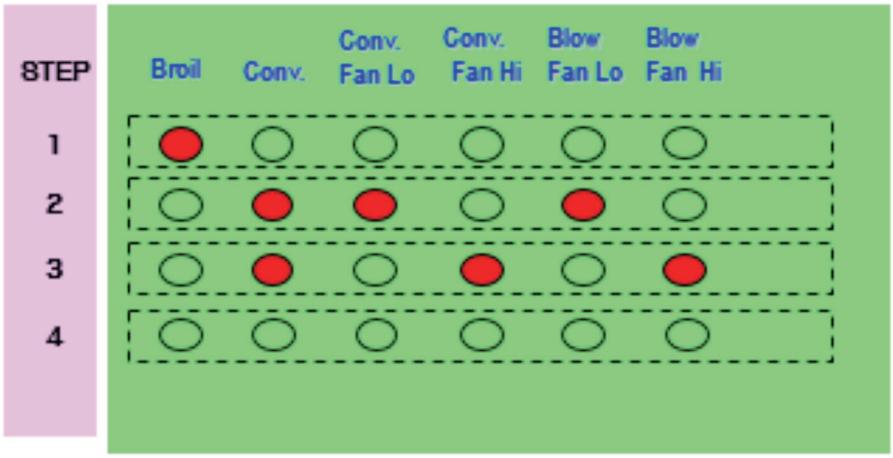

※ If want to quit this sequence, turn the mode knob.

Copyright © 2021 LG Electronics Inc. All rights reserved.
Only training and service purposes

7-2 Basic Check Summary

Symptom : no heating(F9)

-. Check : All heater relays and DLB relay are open

Symptom : Oven hot(F6)

-. Check: All heater relays are open/shorted

Symptom : Oven lamp not operating

-. Check the Lamp coil's resistance

Symptom : Sensor error or no heating(F1,F2)

-. Check : Sensor resistance

Symptom : Door lock fail (F10)

-. Check : relative part

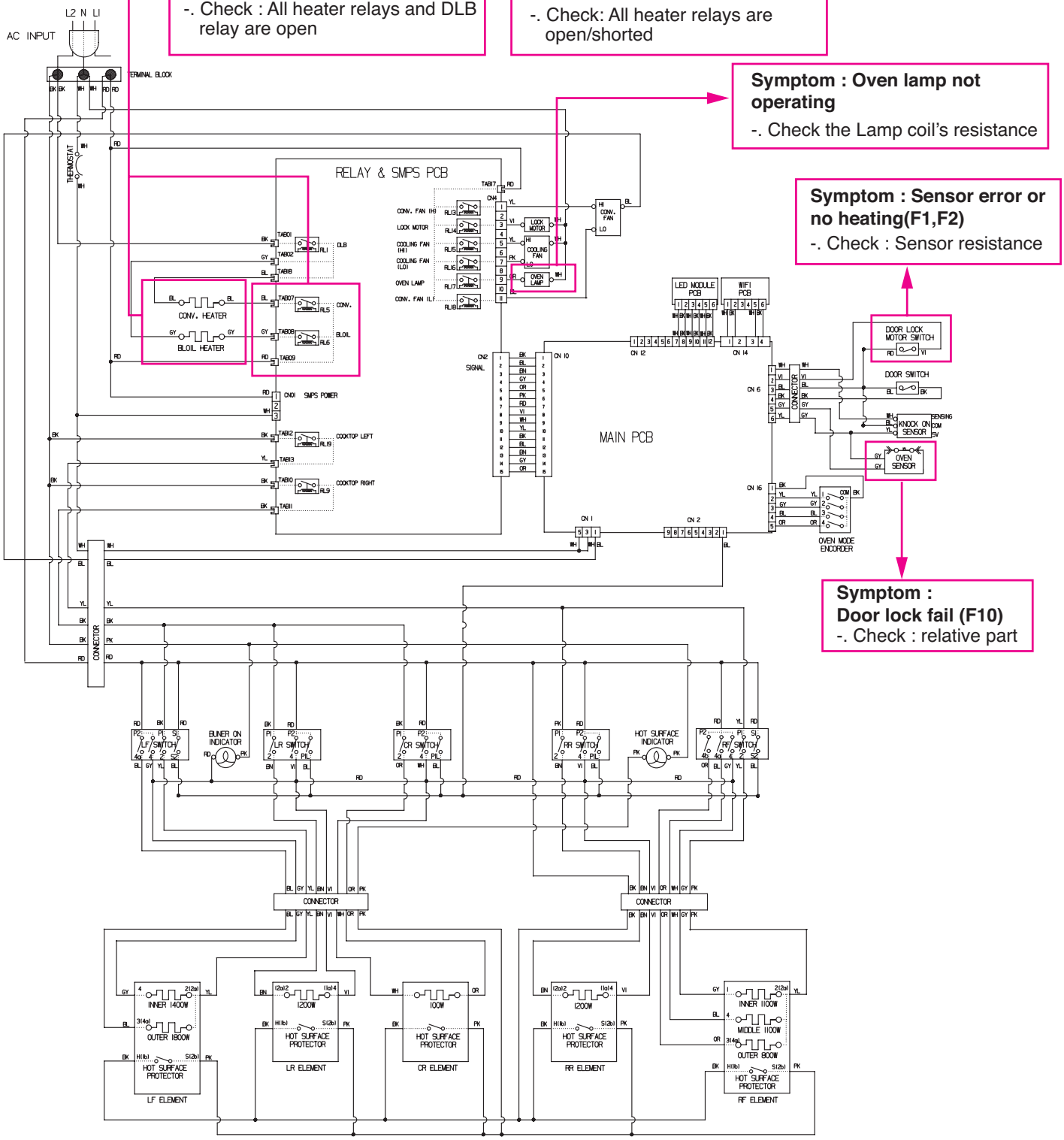

Copyright © 2021 LG Electronics Inc. All rights reserved.
Only training and service purposes

TROUBLESHOOTING

When the oven has some failure on cooking,

-. Cancel the cook.
-. In case of failure, F-code will not display.
-. It memorizes F-code logs in EEPROM.

Check the failure code as below steps.

1. Press the any button, and Mode knob is placed in the Off
2. Press the "4" and "6" key at the same time for 1 second.

If the oven has some failure, the oven will show the failure code, like FIG. 1
It shows the type of F-code and times of occurred failure alternately for each 4 seconds

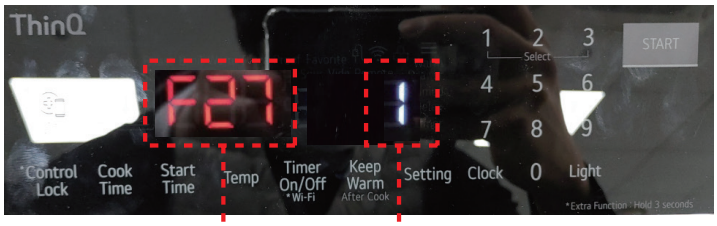

Type of F-Code Times of the occurred Failure

< FIG. 1 >

If the oven does not have any failure, the oven will display like FIG. 2

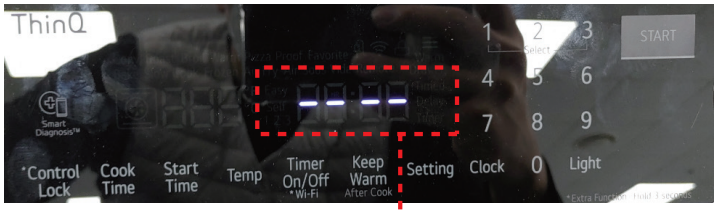

NO ERROR

< FIG. 2 >

NOTE:
After checking the failure code, turn the mode knob.

Copyright © 2021 LG Electronics Inc. All rights reserved.
Only training and service purposes

FAILURE CODE SUMMARY

Code	Description	How to detect	Check point
F-1	**Opened Sensor**	Oven sensor(thermistor) remains open for over 1 min during cooking.	1. Wiring 2. Oven Sensor
F-2	**Shorted Sensor**	Oven sensor (thermistor) is short for over 1 min during cooking.	1. Wiring 2. Oven Sensor
F-3	**Key shorted Error**	When some keys are continuously short for over 60 seconds.	Key malfunction
F-6	**Oven hot**	The oven temperature is over 650°F continuously during 2 minutes on cooking except self cleaning.	1. Oven Sensor 2. Relay
F-7	**Convection Fan Motor Error**	Convection fan operating can't be detected over 1 minute in all cases of convection fan operating.	1. Electric Wiring
F-8	**Shorted Probe Sensor**	Oven probe is shorted	1. Electric Wiring 2. Probe Sensor
F-9	**No heating**	If starting oven temperature does not exceed 150°F and oven temperature is less Than or equal to starting temperature over 5 minutes during preheating, while door is closed.	1. Electric Wiring 2. Gas Valve 3. Ignitor 4. Oven Sensor
F-10	**Door Lock Fail**	In case of Door Lock Failure in operating Lock motor.	1. Electric Wiring 2. Motor's Resistance 3. Micro Switch
F-27	**Stalled Fan Lock Error**	When cooling fan is stalled during self clean	1. Electric Wiring 2. Replace cooling fan

Copyright © 2021 LG Electronics Inc. All rights reserved.
Only training and service purposes

CHECKING FLOW CHART BY FAILURE

Symptom	*Check Point*
1. Power Failure(Dead) **2. No Display** **3. No Backlighting**	1. Check Electrical Wiring 2. Check the PCB Input & Output Voltage with CN10(Main) & CN01(Power) & CN02(Power)

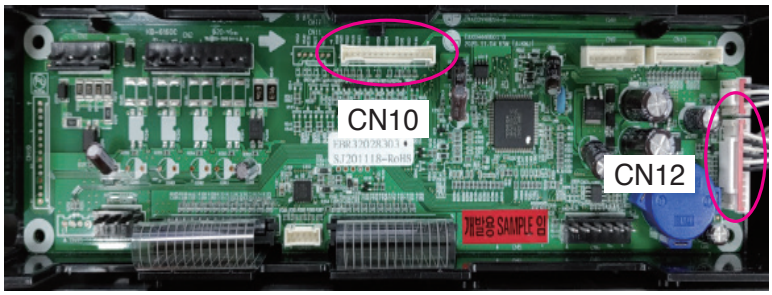

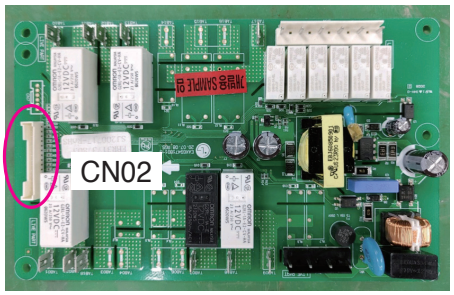

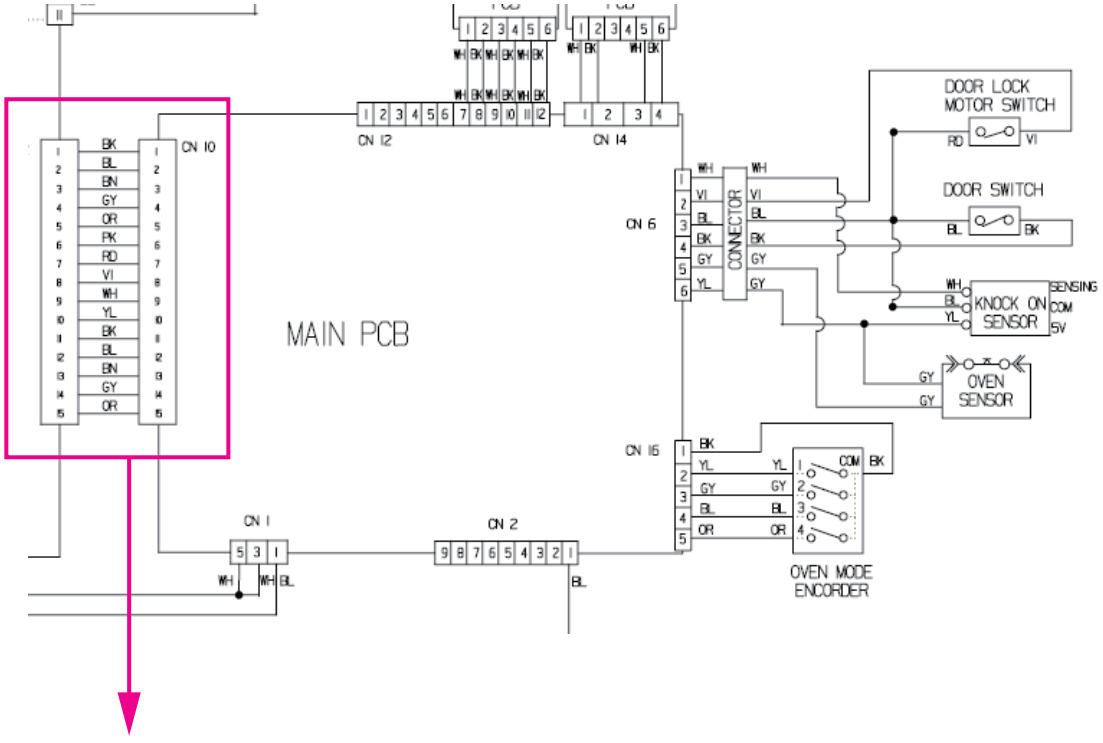

PIN No.	Voltage
1-5	12V

Copyright © 2021 LG Electronics Inc. All rights reserved.
Only training and service purposes

CHECKING FLOW CHART BY FAILURE

1. Power Failed(Dead)

Plug the unit

Check the beep sound,
Rotating the mode knob.
Can hear the beep sound?

Normal? — Yes → Change the LED Module and Backlighting Module.

No

Check the connection of power cord.

Normal? — No → Reconnect. If defective harness replace or fix.

Yes

Check the connection of Power PCB(CN01)

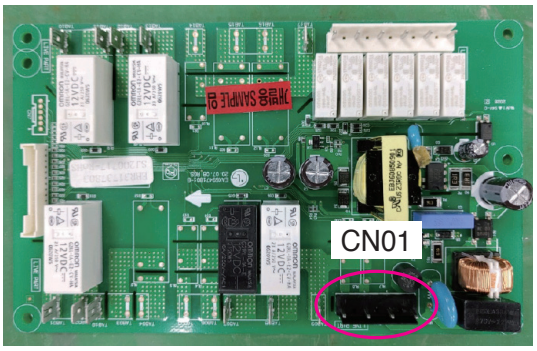

Normal? — No → Reconnect. If defective harness replace or fix.

Yes

Copyright © 2021 LG Electronics Inc. All rights reserved.
Only training and service purposes

CHECKING FLOW CHART BY FAILURE

Check the AC input of Power PCB?

Normal?

No

Check the connection states CN10 of Main PCB and CN02 Power PCB

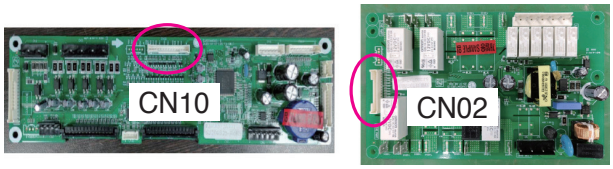

Yes

Check the connection of L1 and N at Terminal block.

Normal?

No

Reconnect.

Yes

Check the Thermostat
Normal : Short
Abnormal : Open

Normal?

No

Replace the Thermostat

Yes

Replace the Power PCB

Copyright © 2021 LG Electronics Inc. All rights reserved.
Only training and service purposes

CHECKING FLOW CHART BY FAILURE

2. No Display

Plug the unit

Check the beep sound,
Rotating the mode knob.
Can hear the beep sound?

Normal? — No → Change the Main PCB.

Yes

Check the connection of Main PCB(CN12) and LED Module.

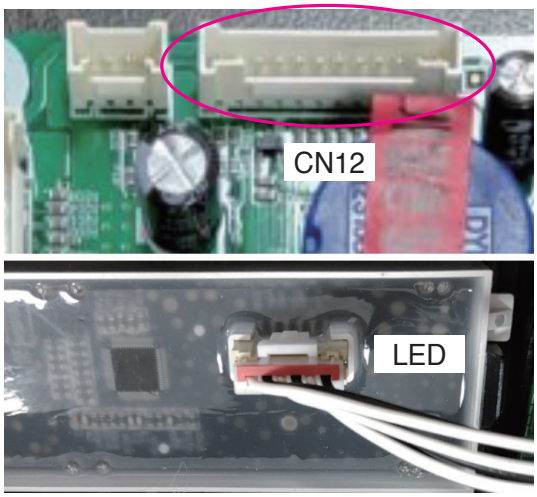

Normal? — No → Reconnect.
If defective harness replace or fix.

Yes

Change the LED Module.

Copyright © 2021 LG Electronics Inc. All rights reserved.
Only training and service purposes

CHECKING FLOW CHART BY FAILURE

Symptom	*Check Point*
1. No heating **2. F9**	1. Check Electric Wiring 2. Check Heater's Resistance. 3. Check the Sensor.

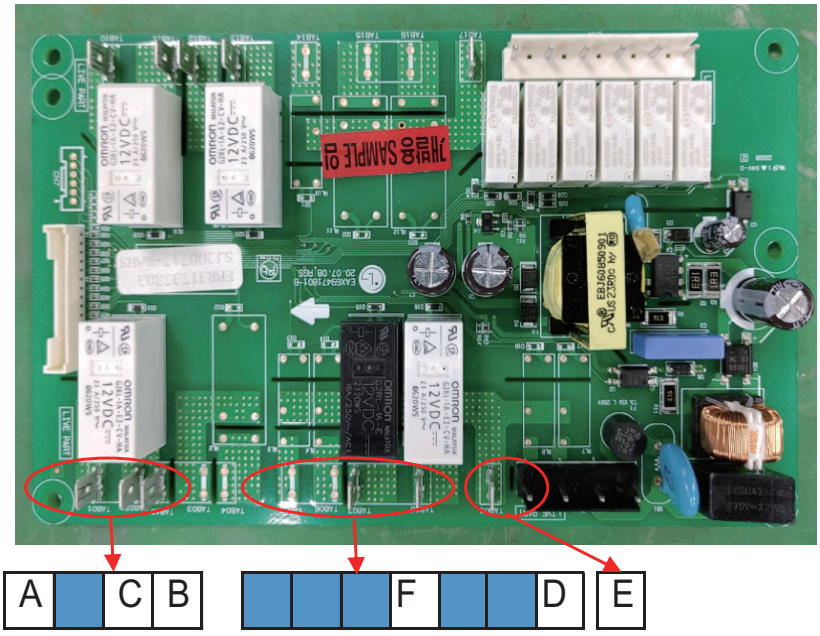

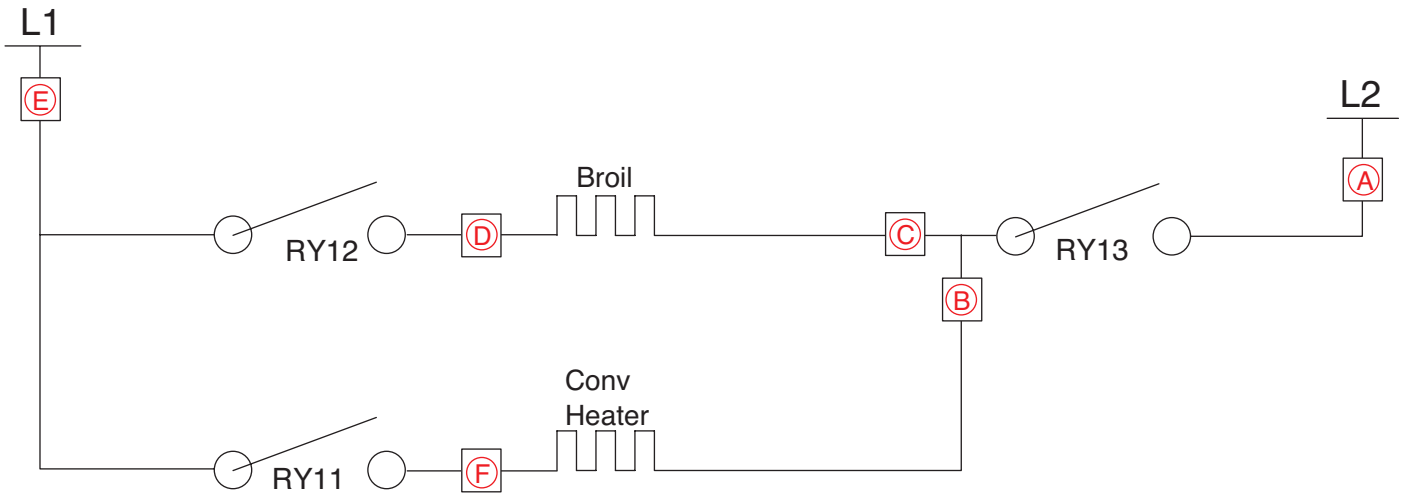

Copyright © 2021 LG Electronics Inc. All rights reserved.
Only training and service purposes

CHECKING FLOW CHART BY FAILURE

Symptom	*Check Point*
1. No heating **2. F9**	1.Check Electrical Wiring 2.Check Heater's Resistance. 3.Check the Sensor.



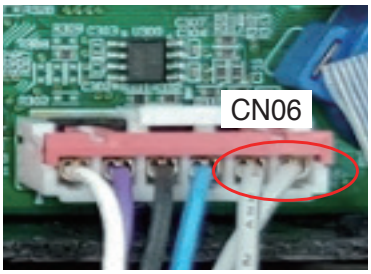

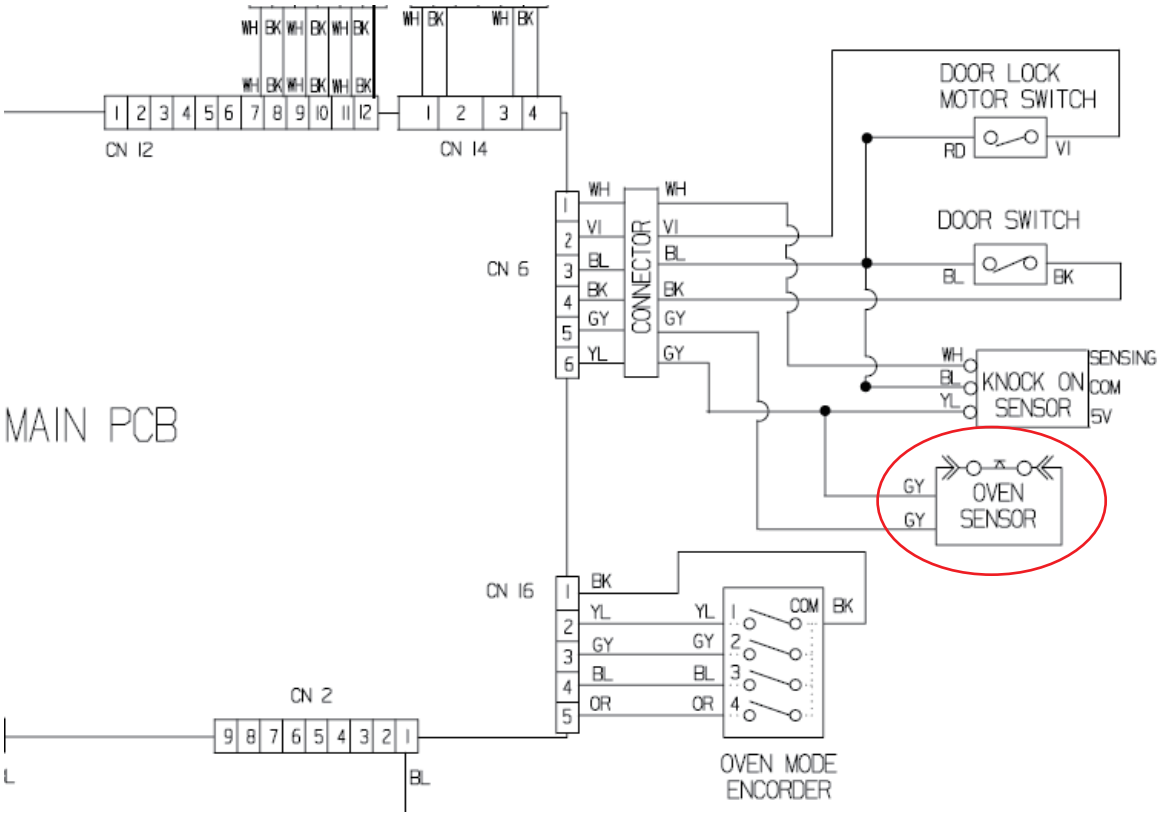

Copyright © 2021 LG Electronics Inc. All rights reserved.
Only training and service purposes

CHECKING FLOW CHART BY FAILURE

Oven does NOT heat, F9?

Unplug the unit

1

Is the Connector disconnected or loose?
(1) Electric wiring of Relay PCB All taps.
(2) Electric wiring of electric element

Yes → Reconnect. If defective harness, Replace or fix

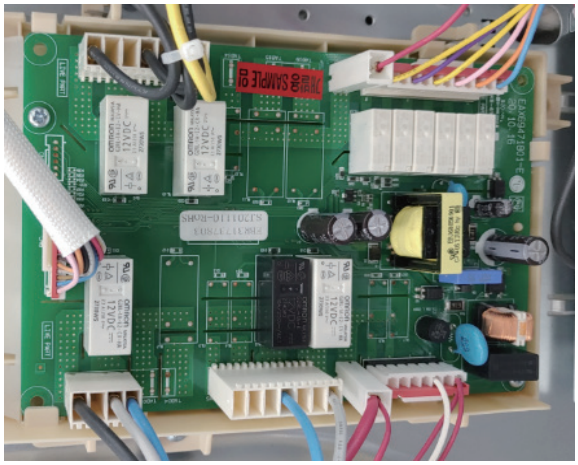



No

2

Check the resistance of each heater. Normal? (Measure the resistance after cooling down. The resistance is shown below)

No → Replace the failed heater

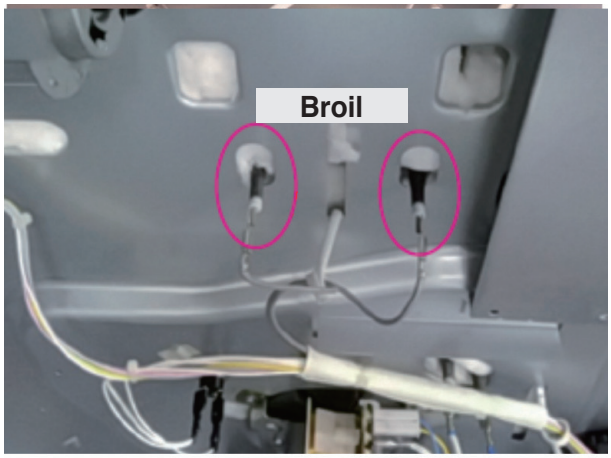

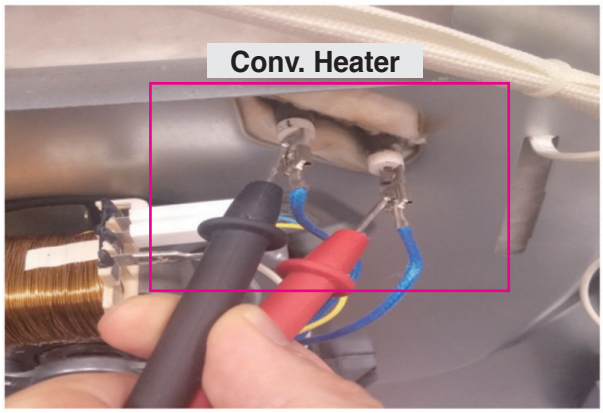

yes

Copyright © 2021 LG Electronics Inc. All rights reserved.
Only training and service purposes

CHECKING FLOW CHART BY FAILURE

3

Range Of resistance

Heater	Resistance[Ω] Approximately
Broil	13.5
Conv. Heater	23

Yes

Plug in the unit

4

Is the value of thermistor normal? (Refer below) Check with the test mode

Yes → Go to No 6

To enter the test mode, follow these steps:

1. Press the any button, and Mode knob is placed in the Off
2. Press the "4" and "6" key at the same time for 1 second.



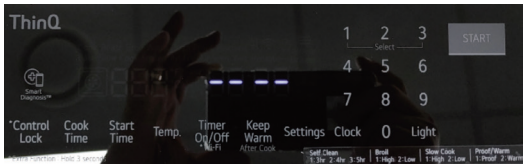

3. Press the "4" and "6" key at the same time for 1 second again.



4. Press the “3” key.

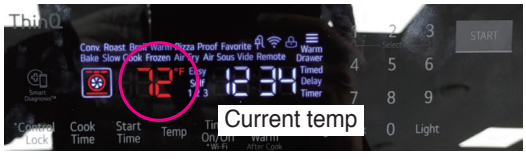

Normal : Thermistor value at room temp is from 70˚F to 90˚F

No

Unplug the unit

5

Is the resistance of thermistor normal? → No → Replace the defective Thermistor

Check:

Pins 5 and 6 of CN6 in main PCB
Normal- approximately 1.09kΩ at 25°C

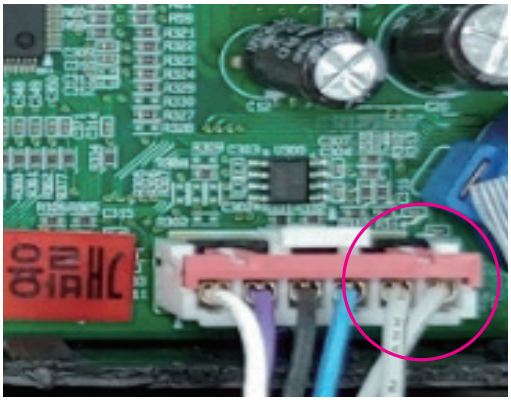

Yes

6

Replace the Relay PCB.
If the same phenomenon occurs even though after replace Relay PCB, you should replace the Main PCB

Copyright © 2021 LG Electronics Inc. All rights reserved.
Only training and service purposes

CHECKING FLOW CHART BY FAILURE

Symptom	*Check Point*
1. Door Lock System Failure **2. F-10**	1. Check the Electric wiring 2. Check the Motor's Resistance



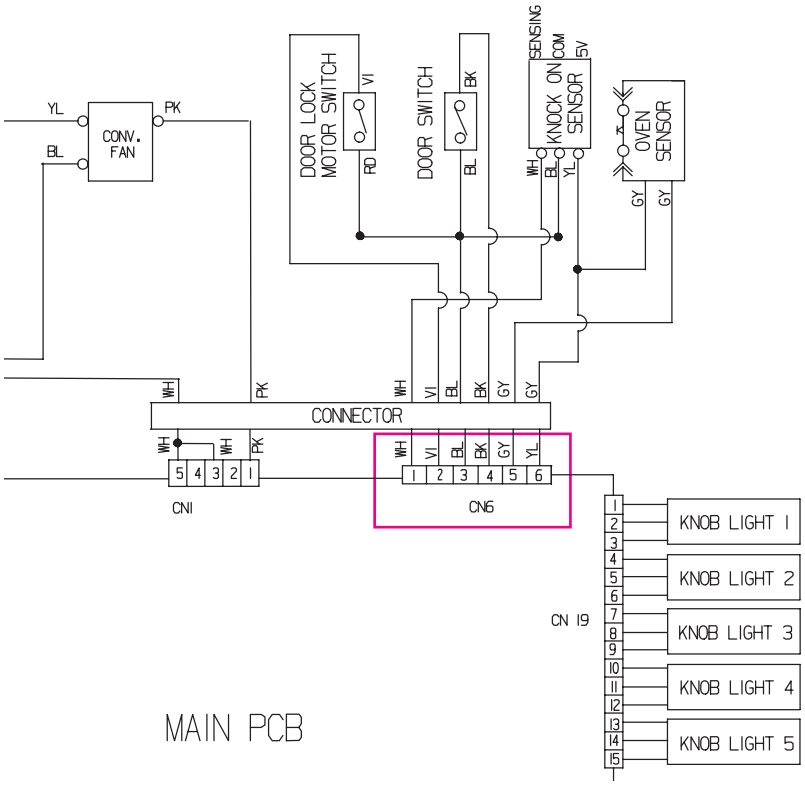

Copyright © 2021 LG Electronics Inc. All rights reserved.
Only training and service purposes

CHECKING FLOW CHART BY FAILURE

Door lock system error → F-10 error

Door lock failed

Disconnect the power

Check the terminal looseness of micro switch and door locking motor

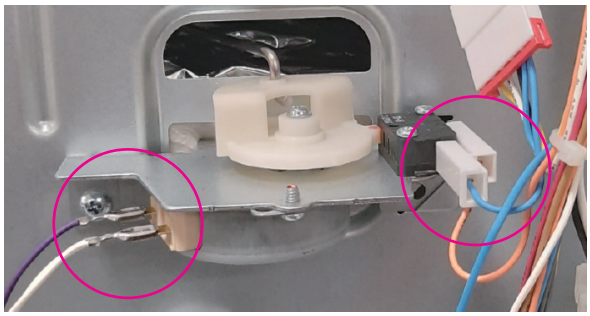

Normal?

No

Reconnect

END

Yes

Check the oven door lock switch(micro switch)
(measure the resistance → Normally open type)

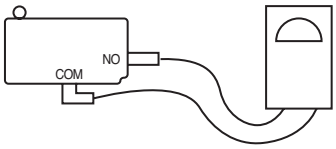

Door latch open	Door latch Locked
Infinite	Continuity

Copyright © 2021 LG Electronics Inc. All rights reserved.
Only training and service purposes

CHECKING FLOW CHART BY FAILURE

Door lock system error → F-10 error

Normal?

No

Replace the micro switch

END

Yes

Check the door locking motor (measure the resistance)
normal: approximately 3.9 kΩ
abnormal: infinite or below 5 Ω

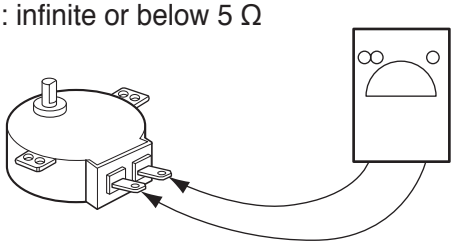

Normal?

No

Replace the door locking motor

END

Yes

Check the looseness of CN02

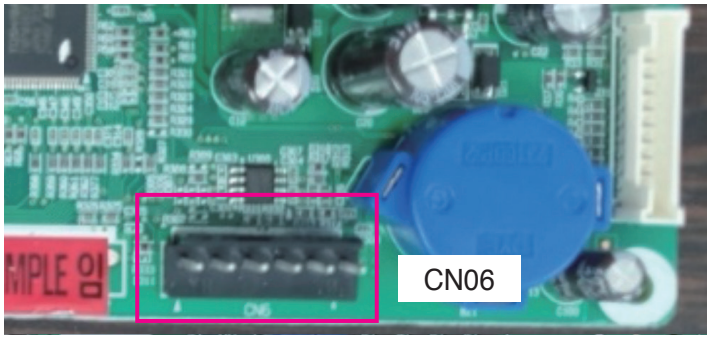

Normal?

No

Reconnect

END

Yes

Replace the main PCB

Copyright © 2021 LG Electronics Inc. All rights reserved.
Only training and service purposes

CHECKING FLOW CHART BY FAILURE

Symptom	*Check Point*
1. Sensing Fail **2. F-1** **3. F-2**	1. Check the electric wiring 2. Check the test Mode 3. Check the sensor(thermistor) resistance



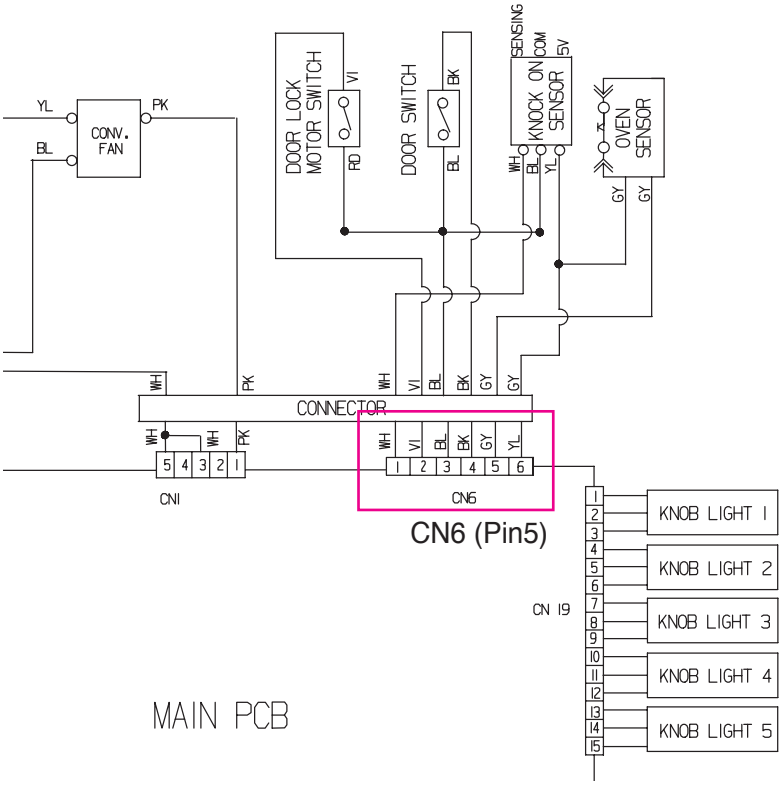

Copyright © 2021 LG Electronics Inc. All rights reserved.
Only training and service purposes

CHECKING FLOW CHART BY FAILURE

Main oven sensing error → F-1, F-2 error

Sensing Fail, F1, F2?

Unplug the unit

1

Is the Connector disconnected or loose?

(1) Sensor connection

(2) CN10 of Main PCB

Yes → Reconnect or adjust the connection

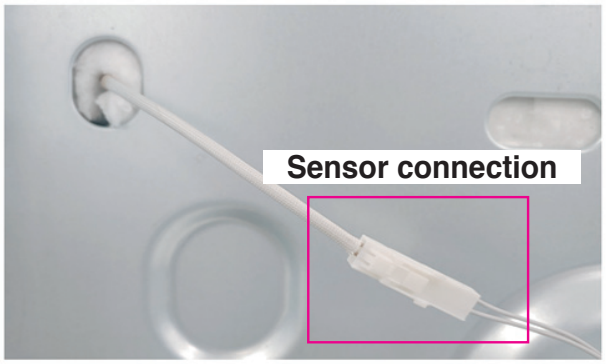

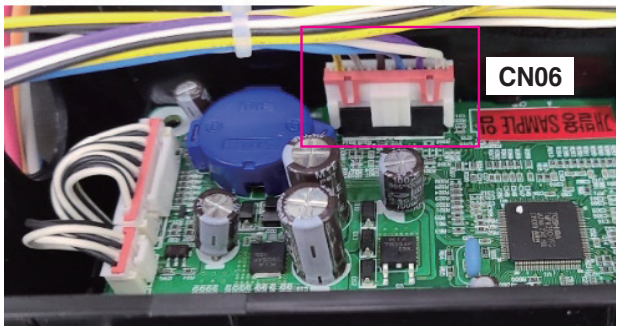

No

Plug in the unit

2

Is the value of thermistor normal? (Refer below)
Check with the test mode

Yes → Go to No 4

To enter the test mode, follow these steps:

1. Press the any button, and Mode knob is placed in the Off
2. Press the "4" and "6" key at the same time for 1 second.

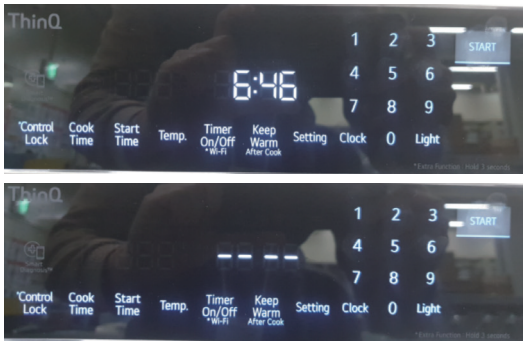

3. Press the "4" and "6" key at the same time for 1 second again.



4. Press the “3” key.

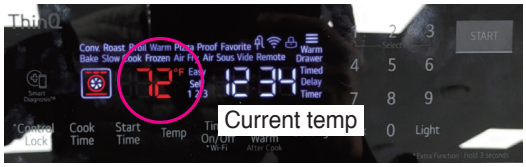

Normal : Thermistor value at room temp is from 70˚F to 90˚F

No

Copyright © 2021 LG Electronics Inc. All rights reserved.
Only training and service purposes

CHECKING FLOW CHART BY FAILURE

Main oven sensing error → F-1, F-2 error

3

Is the resistance of thermistor normal?

No → Replace the defective Thermistor

Check :

Pin 5 and 6 of CN6 of Main PCB

Normal – approximately 1.09 K ohm at 25°C

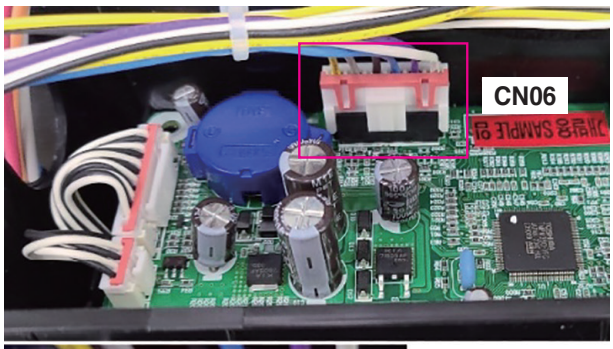

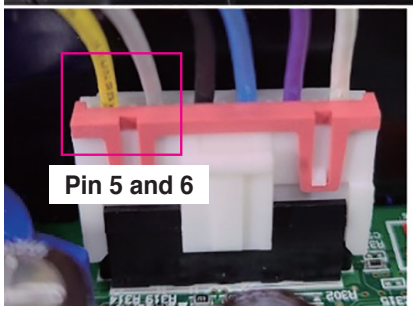

Yes ↓

4

Replace the Relay PCB.
If the same phenomenon occurs even though after replace Relay PCB, you should replace the Main PCB.

Copyright © 2021 LG Electronics Inc. All rights reserved.
Only training and service purposes

CHECKING FLOW CHART BY FAILURE

Symptom	*Check Point*
1. Oven hot **2. F6**	1.Check the Resistance of the Relay. 2.Check the Sensor's Resistance

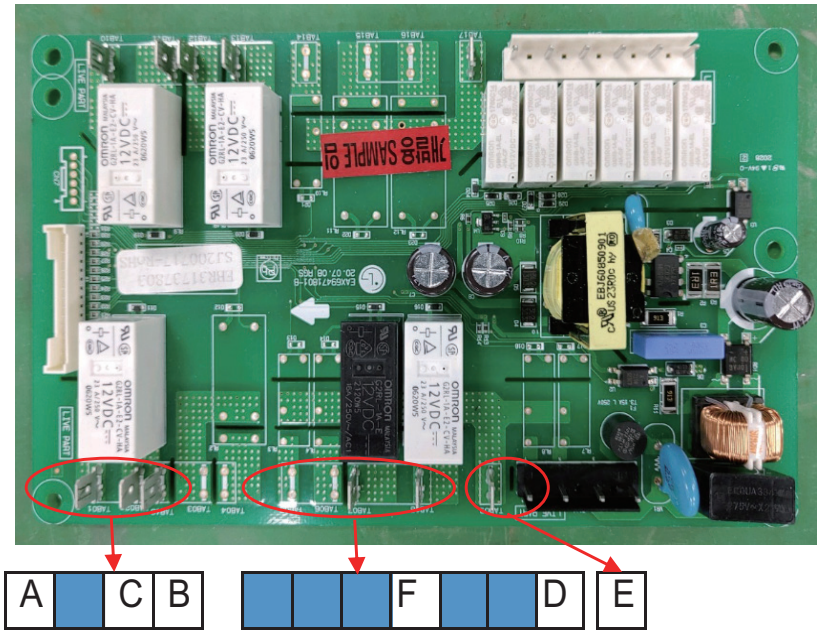

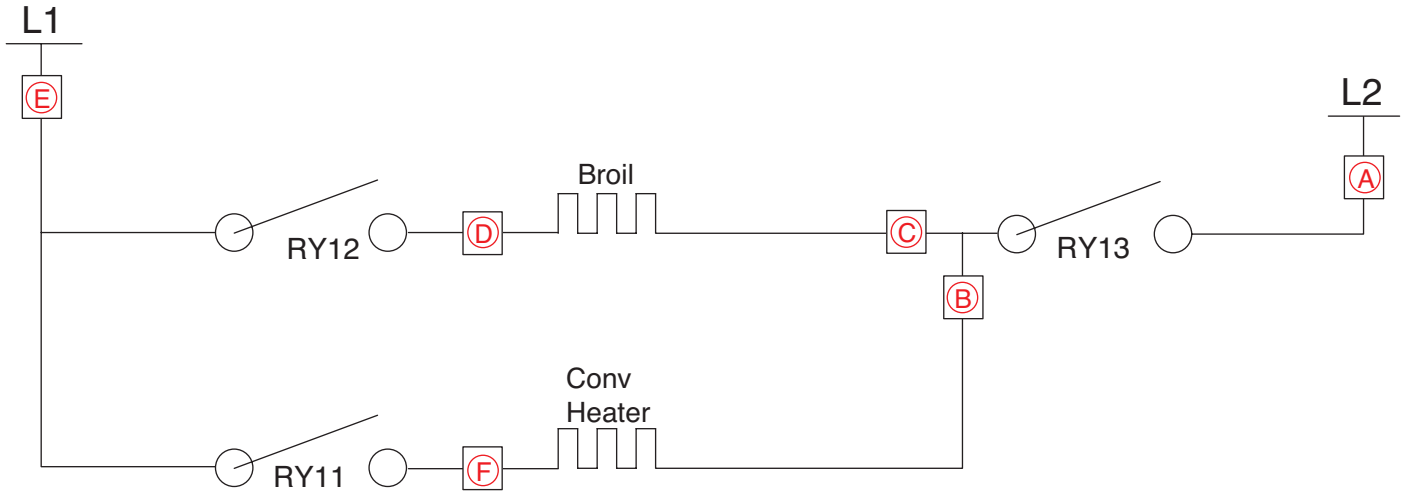

Copyright © 2021 LG Electronics Inc. All rights reserved.
Only training and service purposes

CHECKING FLOW CHART BY FAILURE

Symptom	*Check Point*
1. Oven hot **2. F6**	1.Check the Resistance of the Relay. 2.Check the Sensor's Resistance



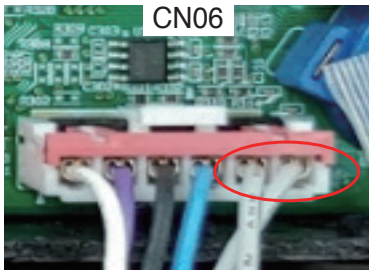

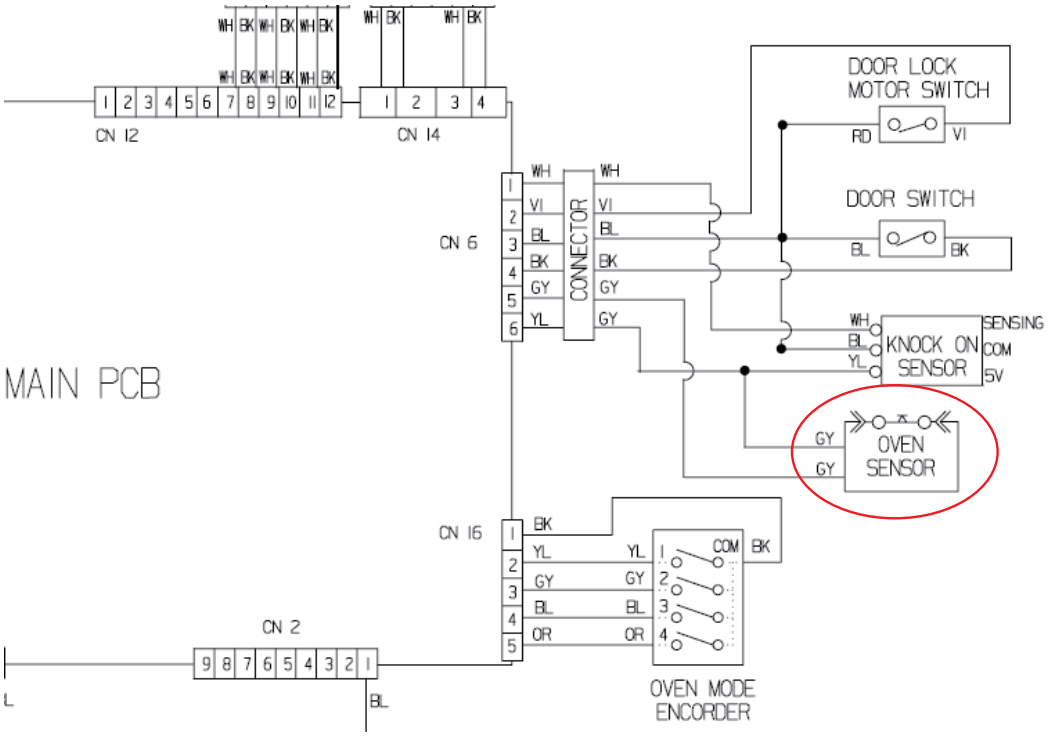

Copyright © 2021 LG Electronics Inc. All rights reserved.
Only training and service purposes

CHECKING FLOW CHART BY FAILURE

Oven hot, F6?

Yes

Unplug the unit

1

Is the resistance of thermistor normal?

No → Replace the defective Thermistor

Check:

Pin 5 and 6 of CN6 of Main PCB

Normal – approximately 1.09 K ohm at 25°C

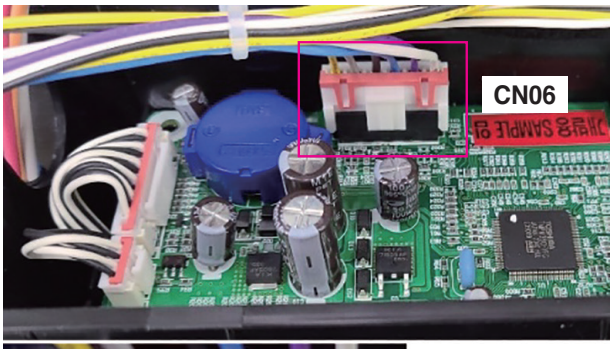

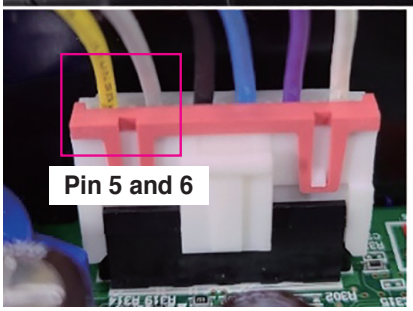

Yes

2

Is the heater relay normal?

No → Replace the Relay PCB

Measure the resistance of Heater relay and Live.

Normal : infinite

Abnormal : shorted



Tap 09 and Tap07 : Ry 5

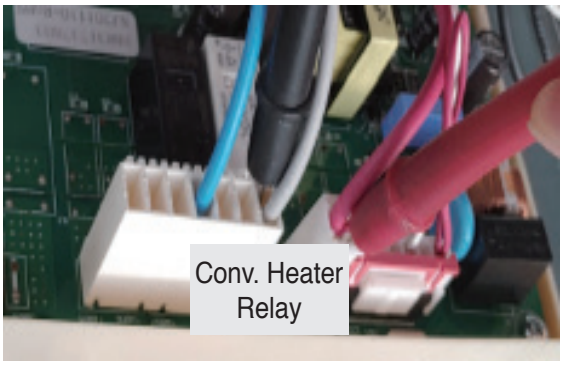

Tap 09 and Tap08 : Ry 6

Yes

Copyright © 2021 LG Electronics Inc. All rights reserved.
Only training and service purposes

CHECKING FLOW CHART BY FAILURE

3

Is the DLB relay normal?
Measure the resistance

Normal : infinite
Abnormal : shorted

No → Replace the relay PCB

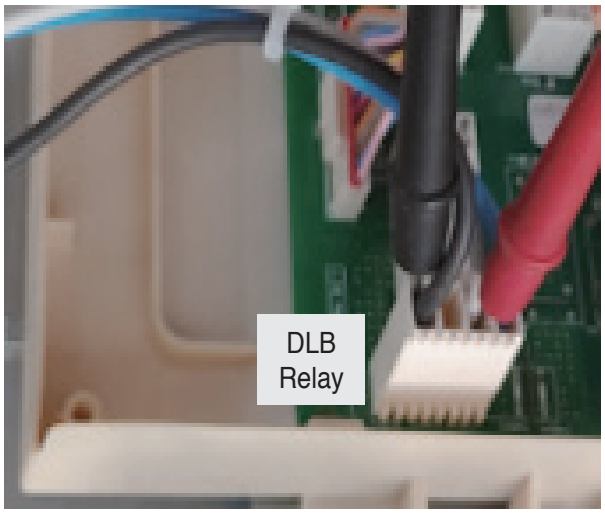

Tap 01 and Tap02 : Ry 1

Yes ↓

Plug in the unit

4

Is the value of thermistor normal? (Refer below)
Check with the test mode

Yes → Replace the Main PCB

To enter the test mode, follow these steps:

1. Press the any button, and Mode knob is placed in the Off
2. Press the "4" and "6" key at the same time for 1 second.

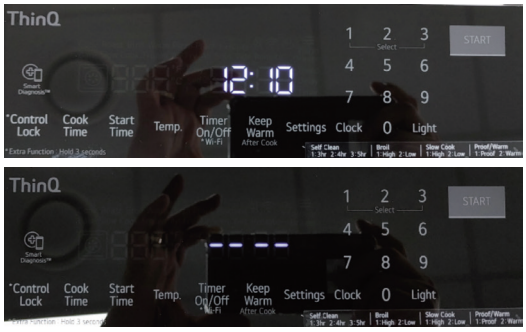

3. Press the "4" and "6" key at the same time for 1 second again.



4. Press the “3” key.



Normal : Thermistor value at room temp is from 70˚F to 90˚F

Copyright © 2021 LG Electronics Inc. All rights reserved.
Only training and service purposes

CHECKING FLOW CHART BY FAILURE

Symptom	*Check Point*
1. Key not working **2. F3 Error**	1. Check the Control Lock. 2. Check the Electrical Wiring.



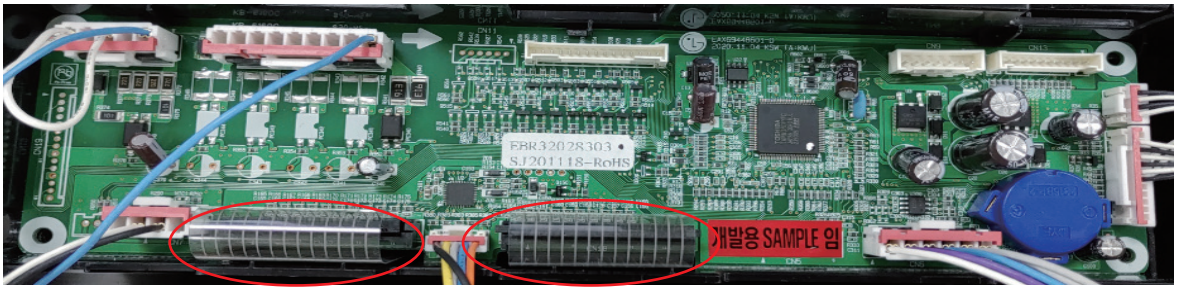

Copyright © 2021 LG Electronics Inc. All rights reserved.
Only training and service purposes

CHECKING FLOW CHART BY FAILURE

Key does not input

Check the oven lock operation.
Nomal: unlock

Normal?

No

Cancel the Door locking
(press the start key for three seconds)

Normal?

No

Yes

END

Yes

Check the connection of the 2 connectors.

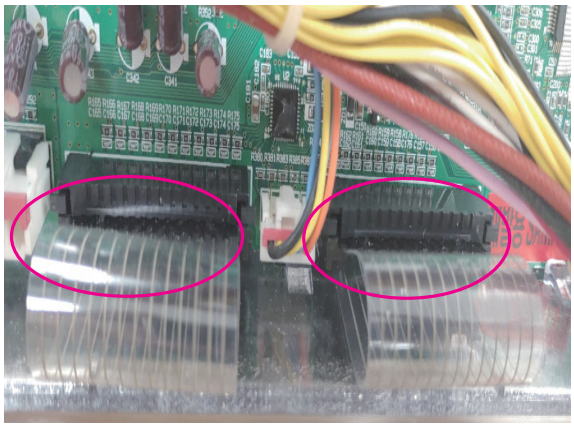

Normal?

No

Yes

Replace the main PCB

END

END

Copyright © 2021 LG Electronics Inc. All rights reserved.
Only training and service purposes

CHECKING FLOW CHART BY FAILURE

Symptom	*Check Point*
1. Instaview not operation	1. Check the Electrical Wiring. 2. Check the DC Input voltage.



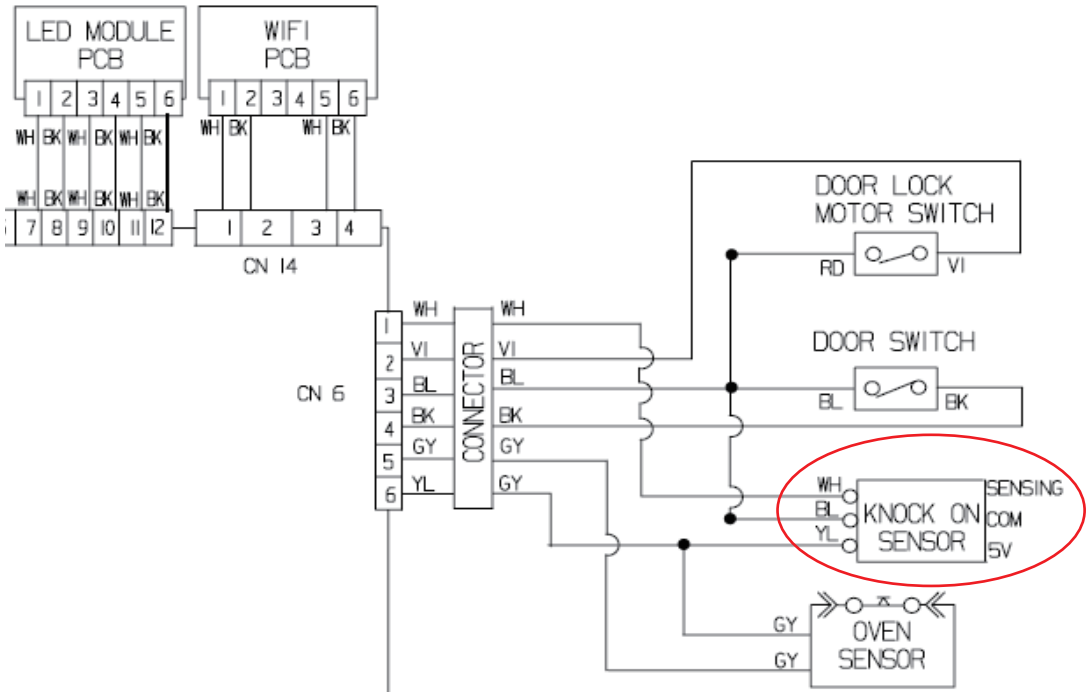

Copyright © 2021 LG Electronics Inc. All rights reserved.
Only training and service purposes

CHECKING FLOW CHART BY FAILURE

Instaview not operation.

Check the connection states between Knob lighting PCB and Main PCB(CN19). Is it ok?

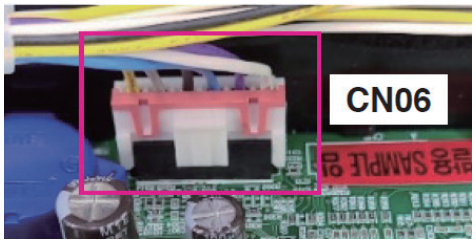



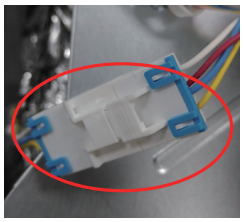

Normal?

No

Reconnect or adjust the connection.

Yes

Check the DC Input of Knock on PCB and DC output of Main PCB.

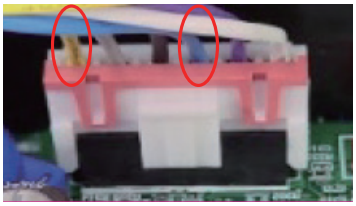

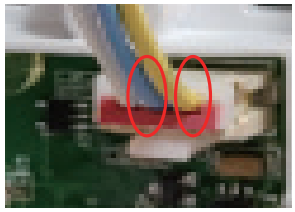

PCB	Pin Vo.	Voltage
CN06(Main)	3(BL)-26(YL)	5V
Insta view PCB	1(YL)-2(BL)	5V

Normal?

No

Change main PCB

Change Instaview PCB.

Copyright © 2021 LG Electronics Inc. All rights reserved.
Only training and service purposes

CHECKING FLOW CHART BY FAILURE

Symptom	*Check Point*
1. Convection Fan Error **2. F-7**	1. Check the electric wiring. 2. Check the Convection Motor resistance

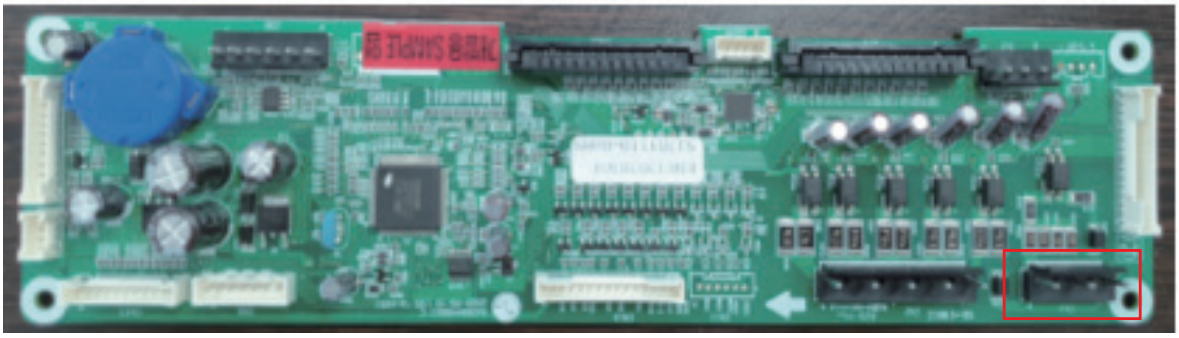

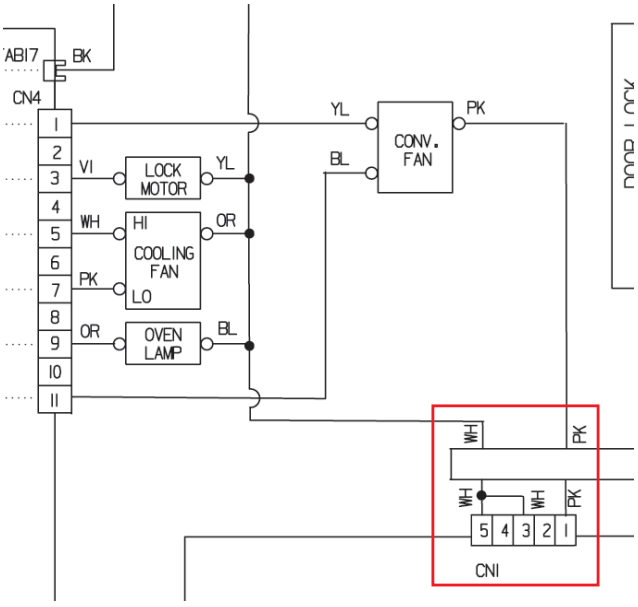

Copyright © 2021 LG Electronics Inc. All rights reserved.
Only training and service purposes

CHECKING FLOW CHART BY FAILURE

Convection Fan does not operated → F7 error

Convection Fan does not operated

Unplug the unit

Is the connection of the convection motor loose or disconnection?

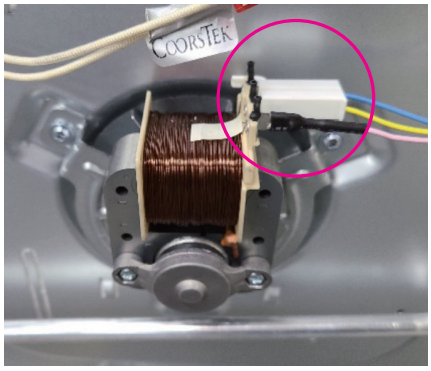

Yes → Reconnect. If defective harness, Replace or fix.

No

Is the connection of CN4 of Power PCB and CN1 of Main PCB normal?

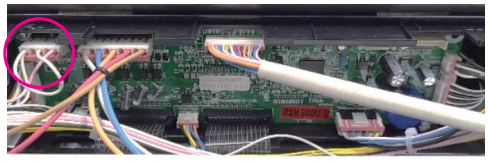

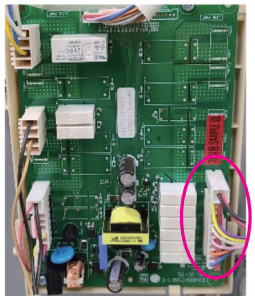

No → Reconnect. If defective harness, Replace or fix

Yes

Check the Convection Motor's resistance. Is it normal? (Refer to 4-1Page "Component Test")

No → Replace the Convection Motor

Yes

Replace the Main PCB

If the same phenomenon occurs even though after Replaced Main PCB, you should replace the Power PCB

Copyright © 2021 LG Electronics Inc. All rights reserved.
Only training and service purposes

CHECKING FLOW CHART BY FAILURE

Symptom	*Check Point*
1. Sensing Fail **2. F-8**	1. Check the probe touches the side panel 2. Check the Main PCB



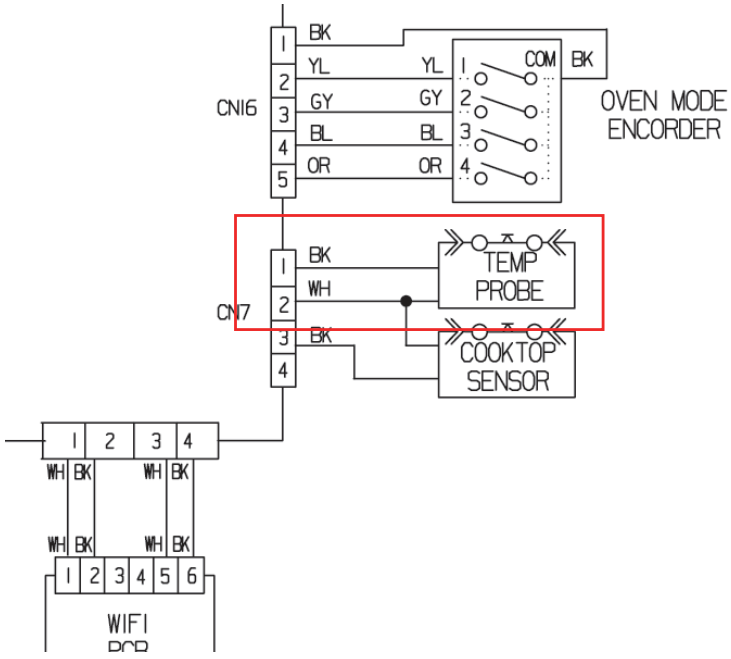

Copyright © 2021 LG Electronics Inc. All rights reserved.
Only training and service purposes

CHECKING FLOW CHART BY FAILURE

Probe Shorted → F8 error

Probe Shorted? (F-8 error)

↓

Disconnect the power

↓

Does the probe touch the side panel?



Yes → Make the probe and side panel separate

No

↓

Check the DC input of Main PCB
- Main PCB 1pin, 2pin of CN07 5V DC?

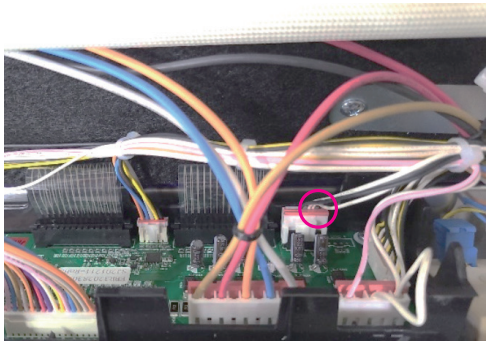

No

↓

Replace the Main PCB

Copyright © 2021 LG Electronics Inc. All rights reserved.
Only training and service purposes

APPENDIX

Key operation Test sequence



1. Keys should be accessed according to the above sequence and check the beep sound when key is accessed If Key is the normal operation will be the number that corresponds to the Key displayed on the LED.
2. If the key access order was changed, the buzzer make double beep sound
3. The buzzer does NOT beep when a key was accessed, it would be defected.

※ **How to stop – Key Test mode**

- Press 1st(Control Lock) ➜ 2nd(Cook Time) ➜ 3rd(Start Time) ➜ …. 20th(Start)

Copyright © 2021 LG Electronics Inc. All rights reserved.
Only training and service purposes

EXPLODED VIEW

INTRODUCTION

MODEL:

Customer Model	Product Code	SVC Model
LSEL6335F	LSEL6335F.ARSLLGA	LSEL6335F /00
LSEL6335D	LSEL6335D.ABDLLGA	LSEL6335D /00

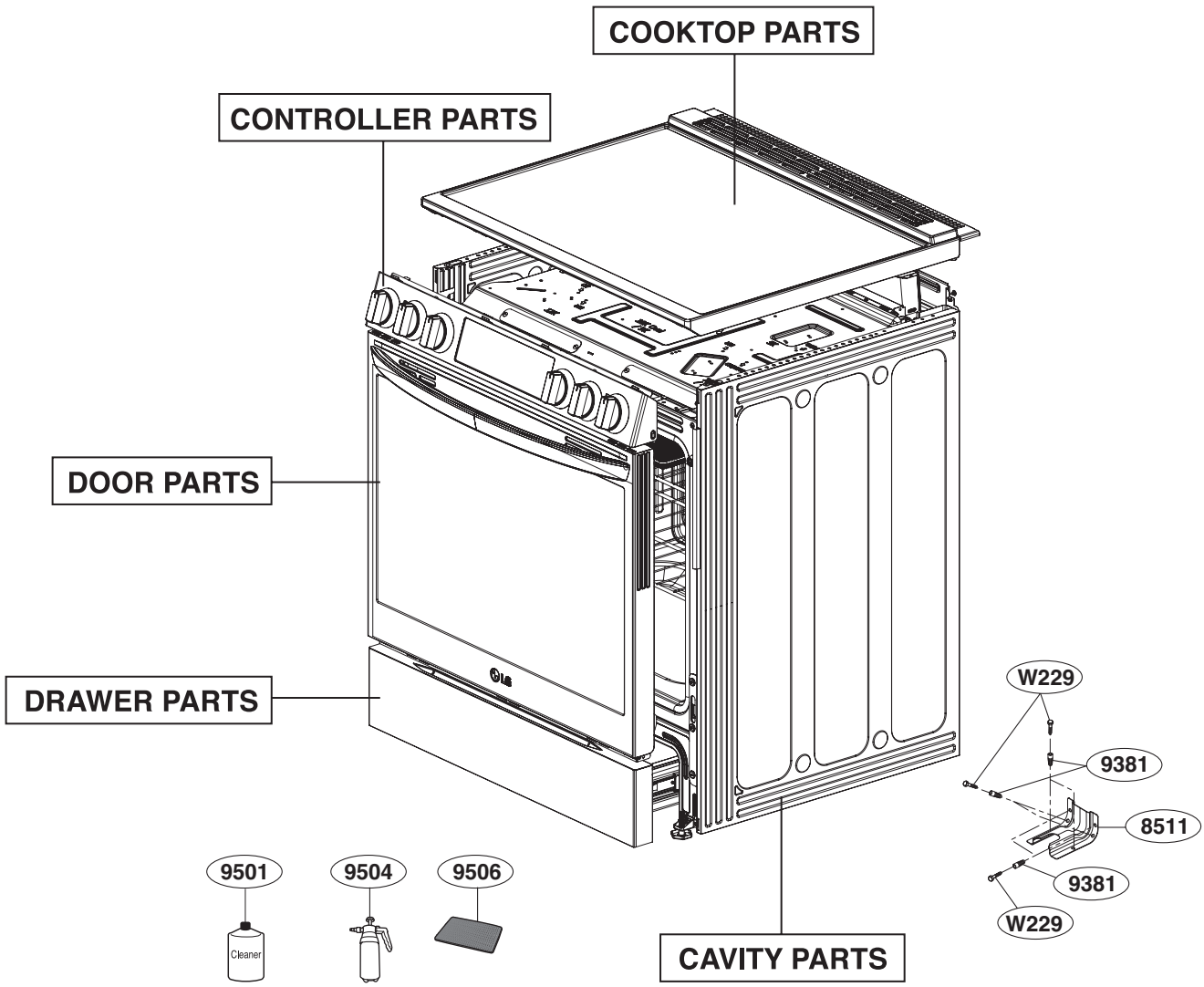

Copyright © 2021 LG Electronics Inc. All rights reserved.
Only training and service purposes

DOOR PARTS

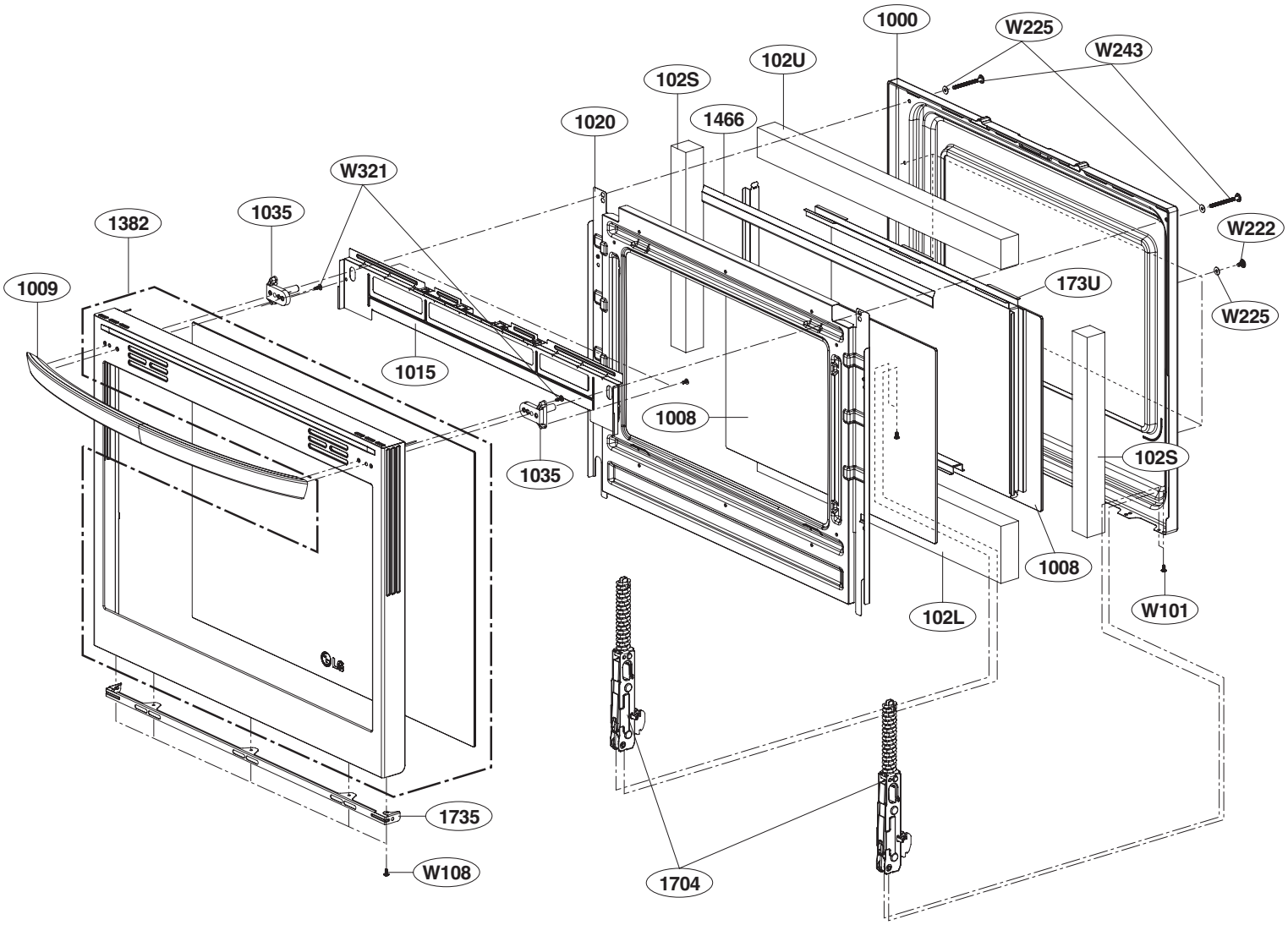

Copyright © 2021 LG Electronics Inc. All rights reserved.
Only training and service purposes

CONTROLLER PARTS

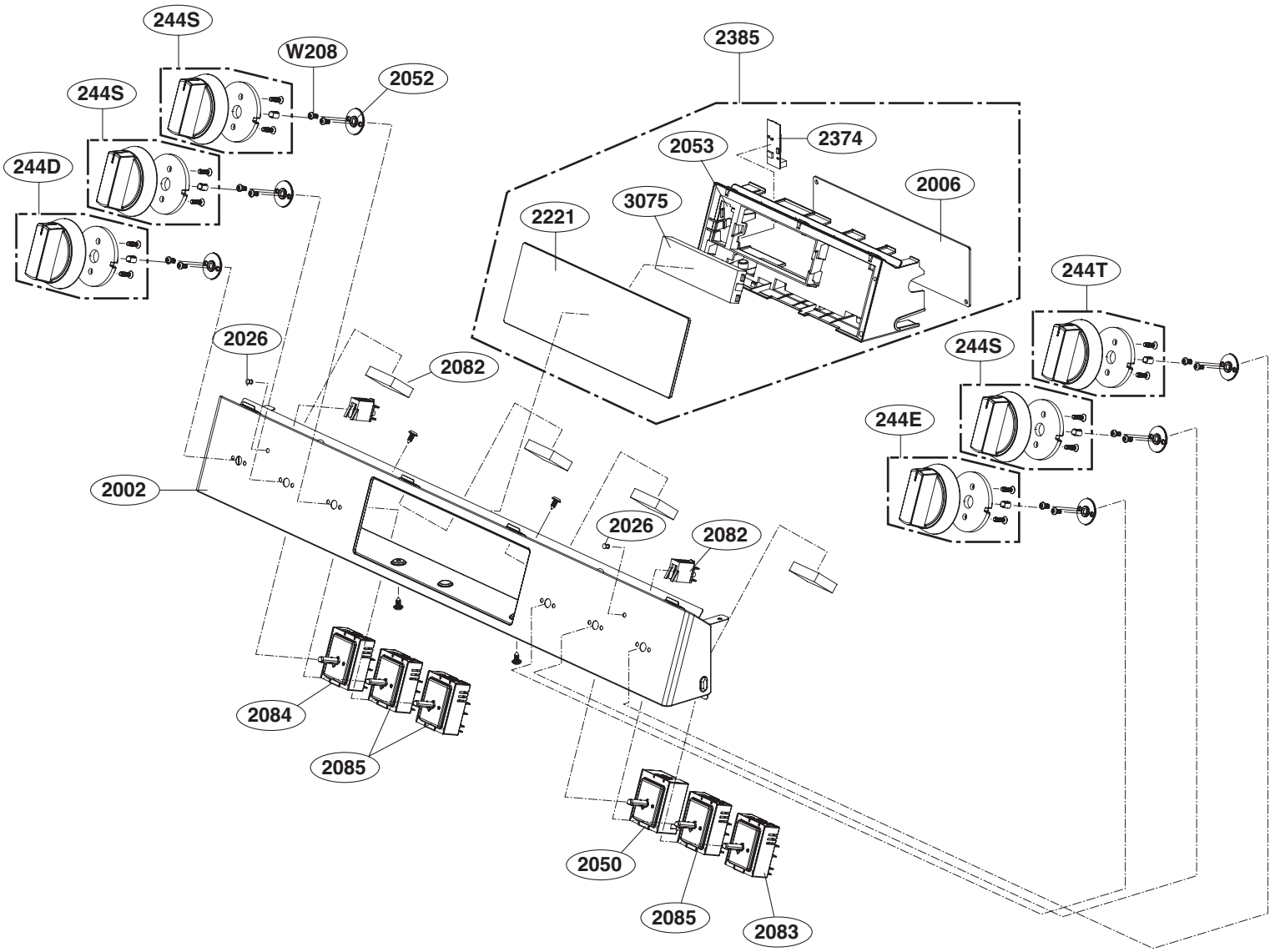

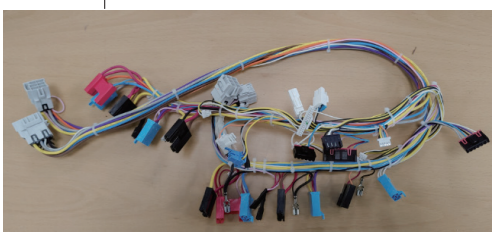

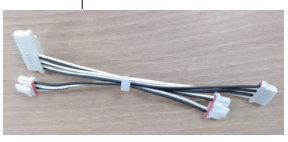

Copyright © 2021 LG Electronics Inc. All rights reserved.
Only training and service purposes

COOKTOP PARTS

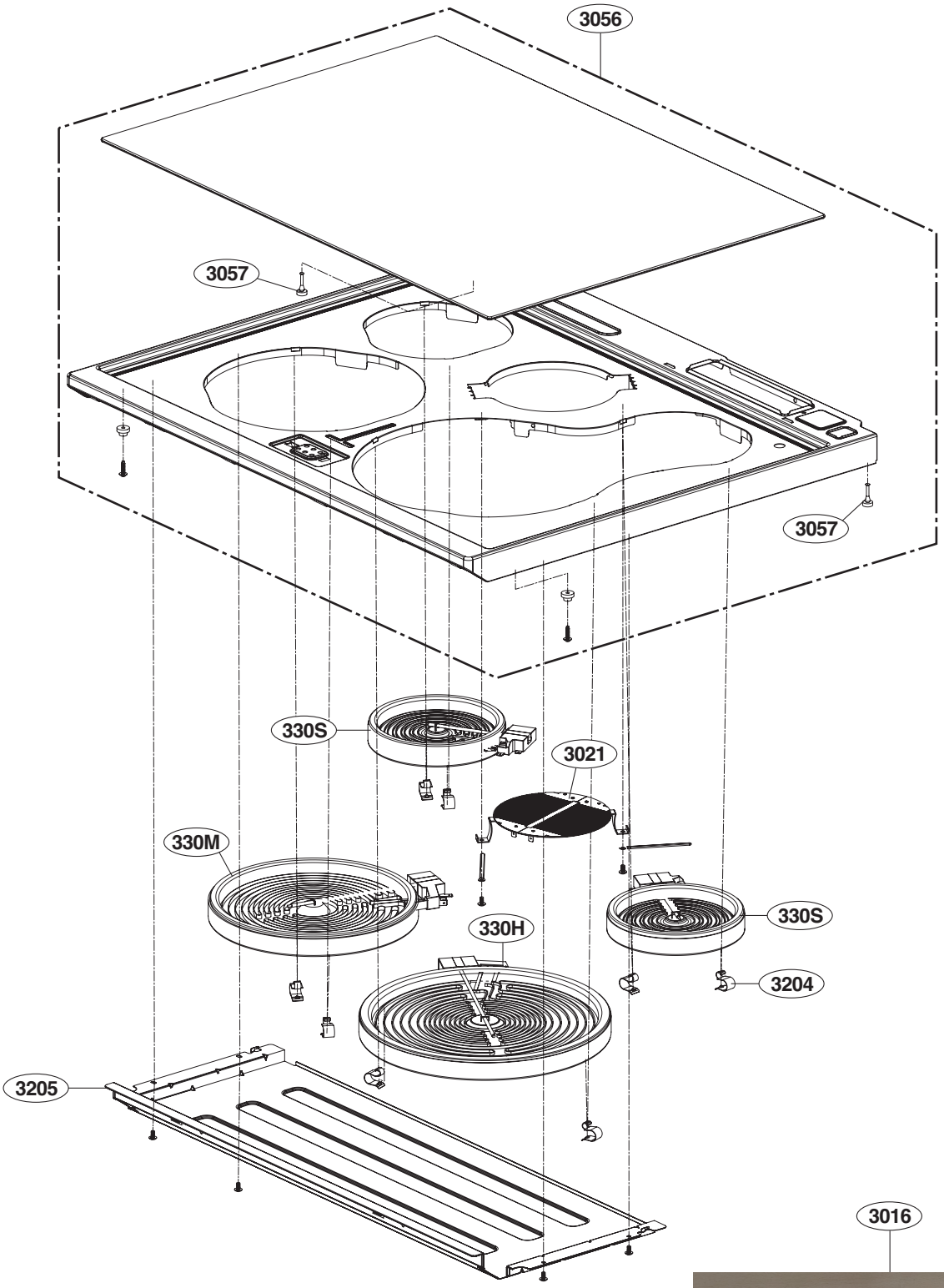

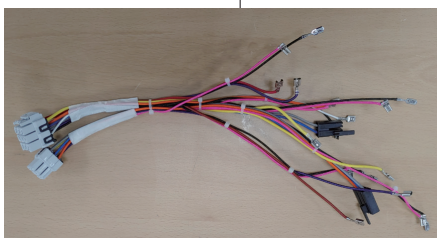

Copyright © 2021 LG Electronics Inc. All rights reserved.
Only training and service purposes

DRAWER PARTS

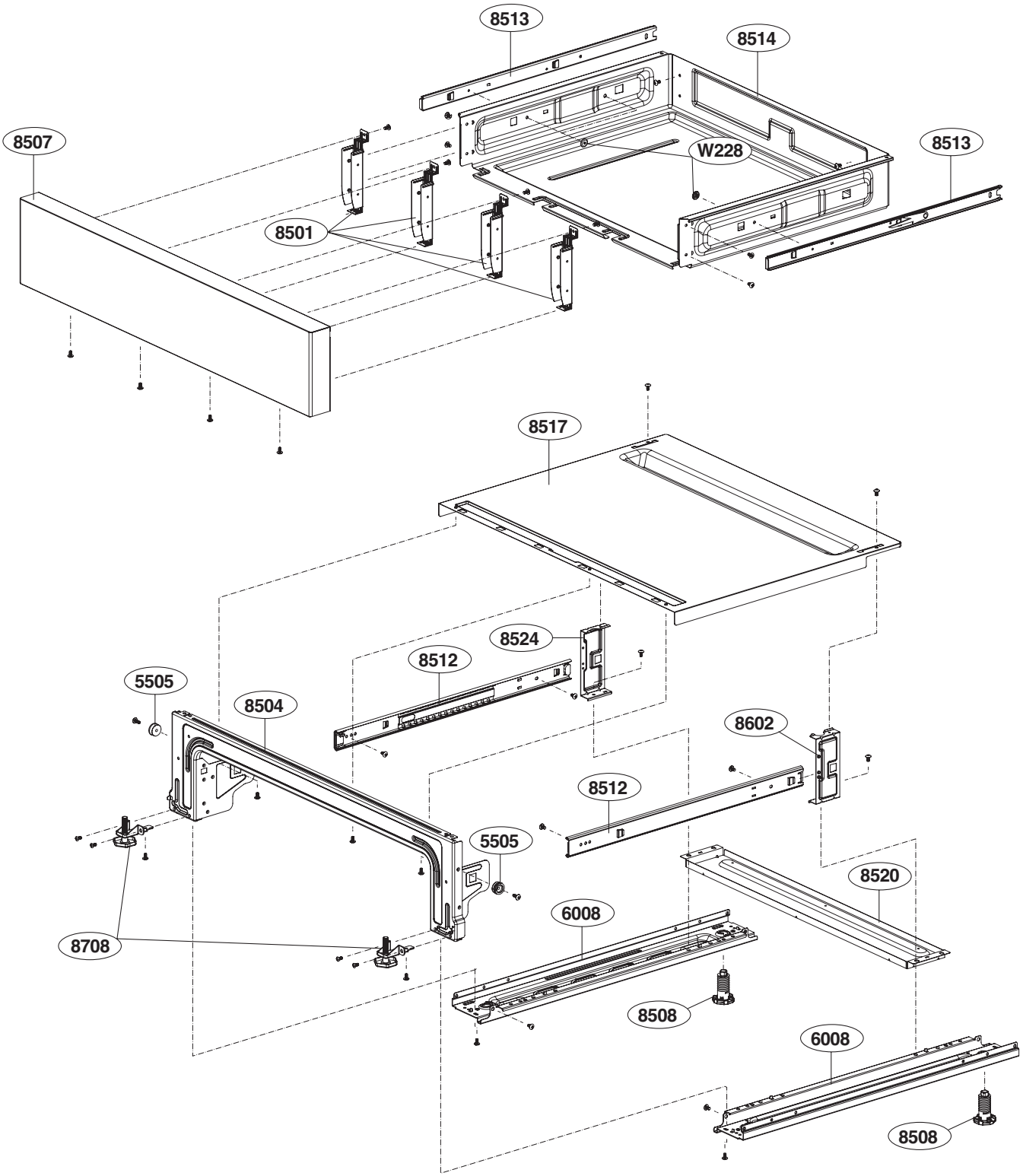

Copyright © 2021 LG Electronics Inc. All rights reserved.
Only training and service purposes

CAVITY PARTS

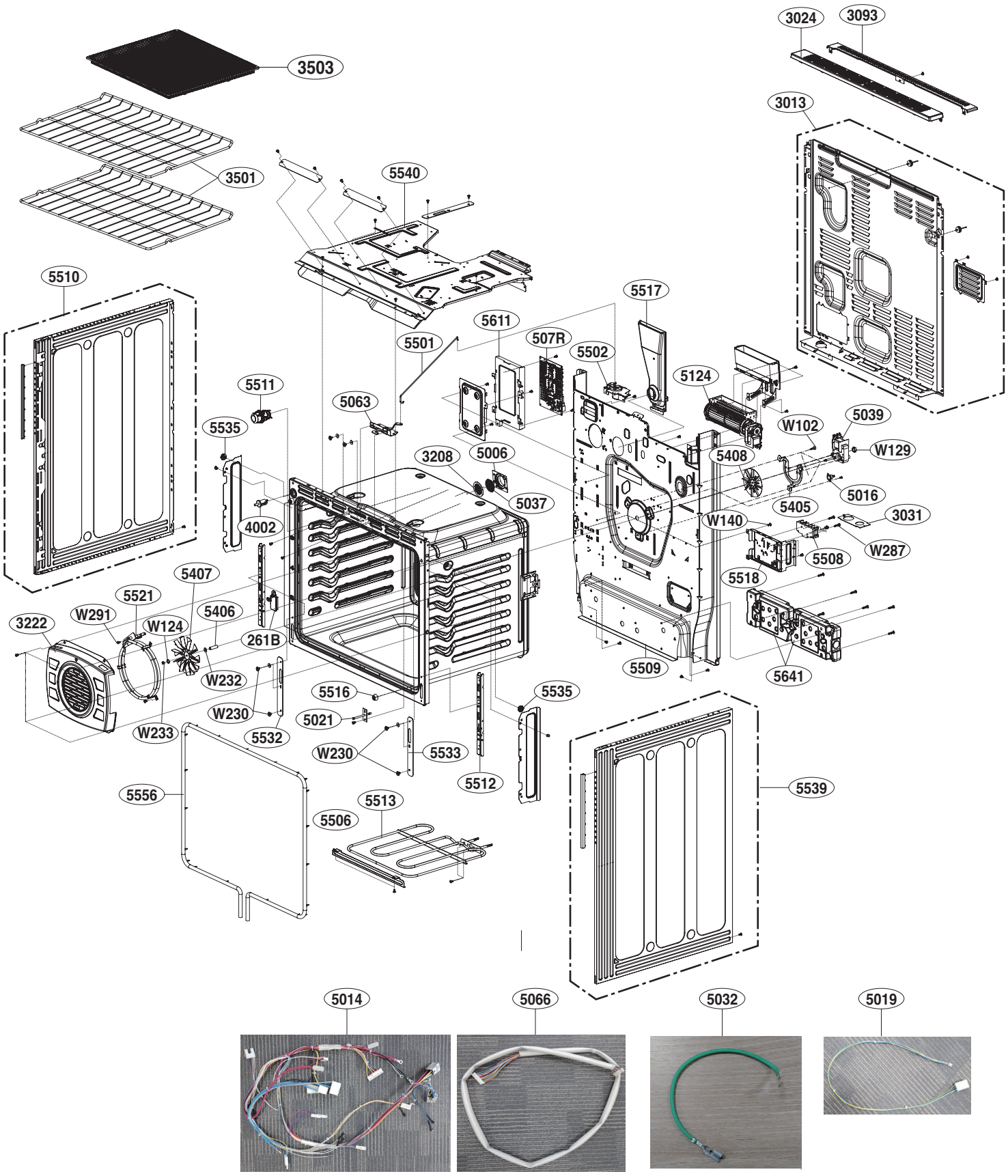

Copyright © 2021 LG Electronics Inc. All rights reserved.
Only training and service purposes


LG
Life's Good