REFRIGERATOR
SERVICE MANUAL

CAUTION
BEFORE SERVICING THE UNIT,
READ THE SAFETY PRECAUTIONS IN THIS MANUAL.

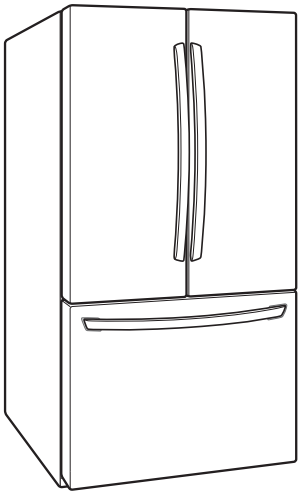

Models:

LFC22770**
LFC24770**
LFC24786**

Colors:

Stainless (ST)
Smooth Black (SB)
Super White (SW)

CONTENTS

SAFETY PRECAUTIONS 2
1. Specifications 3-4
2. Parts Identification 5
3. Disassembly 6-11
Removing and Replacing the refrigerator door 6
Door 6
Door Alignment 7
Fan and Fan Motor (Evaporator) 7
Defrost Control Assembly 7
Lamp 8
Multi Duct 8
Main PWB 8
How to remove and reinstall the pullout drawer 9-10
Pull out drawer 11
Cover Assembly T/V 11
4. Adjustment 12
Compressor 12
Introduction of e-linear compressor 12
5. Circuit Diagram 13
6. PCB Picture 14-15
7. Troubleshooting with error display 16-25
8. Troubleshooting without error display 26-31
9. Reference 32-35
10. Component Testing Information 36-39
11. Troubleshooting 40-51
12. Ice Maker and Dispenser working principles and repair 52-51
13. Description of function & Circuit Micom 56-60

SAFETY PRECAUTIONS

Please read the following instructions before servicing your refrigerator.

1. Unplug the power before handling any electrical components.
2. Check the rated current, voltage, and capacity.
3. Take caution not to get water near any electrical components.
4. Use exact replacement parts.
5. Remove any objects from the top prior to tilting the product.

1. SPECIFICATIONS

SPECIFICATIONS	MODELS	LFC22770SB /00	LFC22770ST /00	LFC22770SW /00	LFC24770SB /00	LFC24770ST /00	LFC24770SW /00	LFC24786SB /00	LFC24786ST /00	LFC24786SW /00
GENERAL FEATURES	Color	Smooth Black	Stainless Steel	Super White	Smooth Black	Stainless Steel	Super White	Smooth Black	Stainless Steel	Super White
	Dimensions (W*D*H)	(29 3/4 x 35 1/2 x 68 1/2) in			(32 3/4 x 35 1/2 x 69 7/8) in					
	Net Weight	237.4 Lb			252.9 Lb					
	Capacity	22cuft			24cuft					
	Refrigerant	R134a								
	Climate class	Temperate (N)								
	Rated Rating	115V~ / 60Hz								
	Cooling System	Fan Cooling								
	Temperature Control	MICOM control								
	Defrosting System	Full Automatic								
		Heater Defrost								
	Insulation	Polyurethan								
	Compressor	FC75LBNA								
	Evaporator	Fin Tube Type								
	Condenser	Wire Condenser								
	Lubricanting Oil	Polyol Ester (POE) RL-7H/7 cst 220 ± 10 cc								
	Drier	MOLECULAR SIEVE XH-7								
	Capillary Tube	ID Ø0.75								
	First Defrost	4 Hours								
	Defrost Cycle	7 - 40 Hours								
	Desfrosting Device	Heater, Sheath								
	Anti-freezing Heater	Water Tank Heater								
REFRIGERATOR	Case Material	Embo (normal)								
	Door Material	PCM	Stainless	PCM	PCM	Stainless	PCM	PCM	Stainless	PCM
	Handle Type	Vista-Handle(Al)								
	Basket, Quantity	5full + 2small								
	Cover, T/V	Optibin Crisper + Humidity Control								
	Lamp	High Brightness LED								
	Shelf	4 fix								
	Tray meat	No								
	Tray Egg	No								
	Tray Vegetable	Yes (2)								
	Pantry	Yes								
FREEZER	Basket, Quantity	No								
	Lamp	LED (Capsule)								
	Shelf	No								
	Ice Maker	Twisting								
	Ice Tray & Bank	Ice Bin			Ice Tray (2) + Ice Bin					
	Tray Drawer (F/U)	Yes (Full Width)								
	Tray Drawer (F/C)	No								
	Tray Drawer (F/L)	Yes (plastic)								

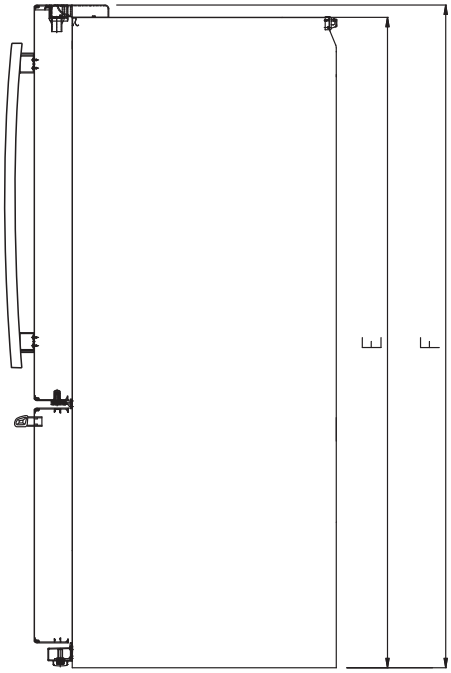

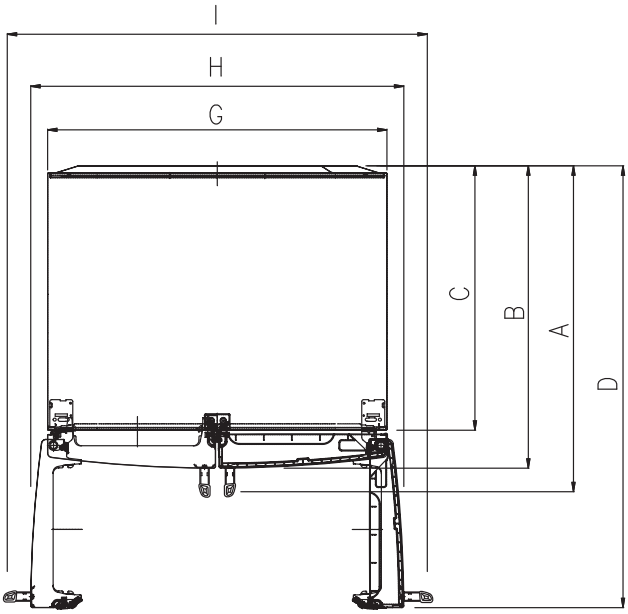

Description		22cuft	24cuft
Depth with Handles	A	35 1/2	35 1/2
Depth w/o Handles	B	33	33
Depth w/o Doors	C	29	29
Depth (Total with door open)	D	44 3/4	46
Height to Top of Door Hinge	E	68 1/2	69 7/8
Height to Top w/out Hinge	F	67 1/4	68 5/8
Width	G	29 3/4	32 3/4
Width (door open 90 deg. w/o handle)	H	33 1/4	36 1/4
Width (door open 90 deg. with handle)	I	38 1/4	41 1/4

2. PARTS IDENTIFICATION

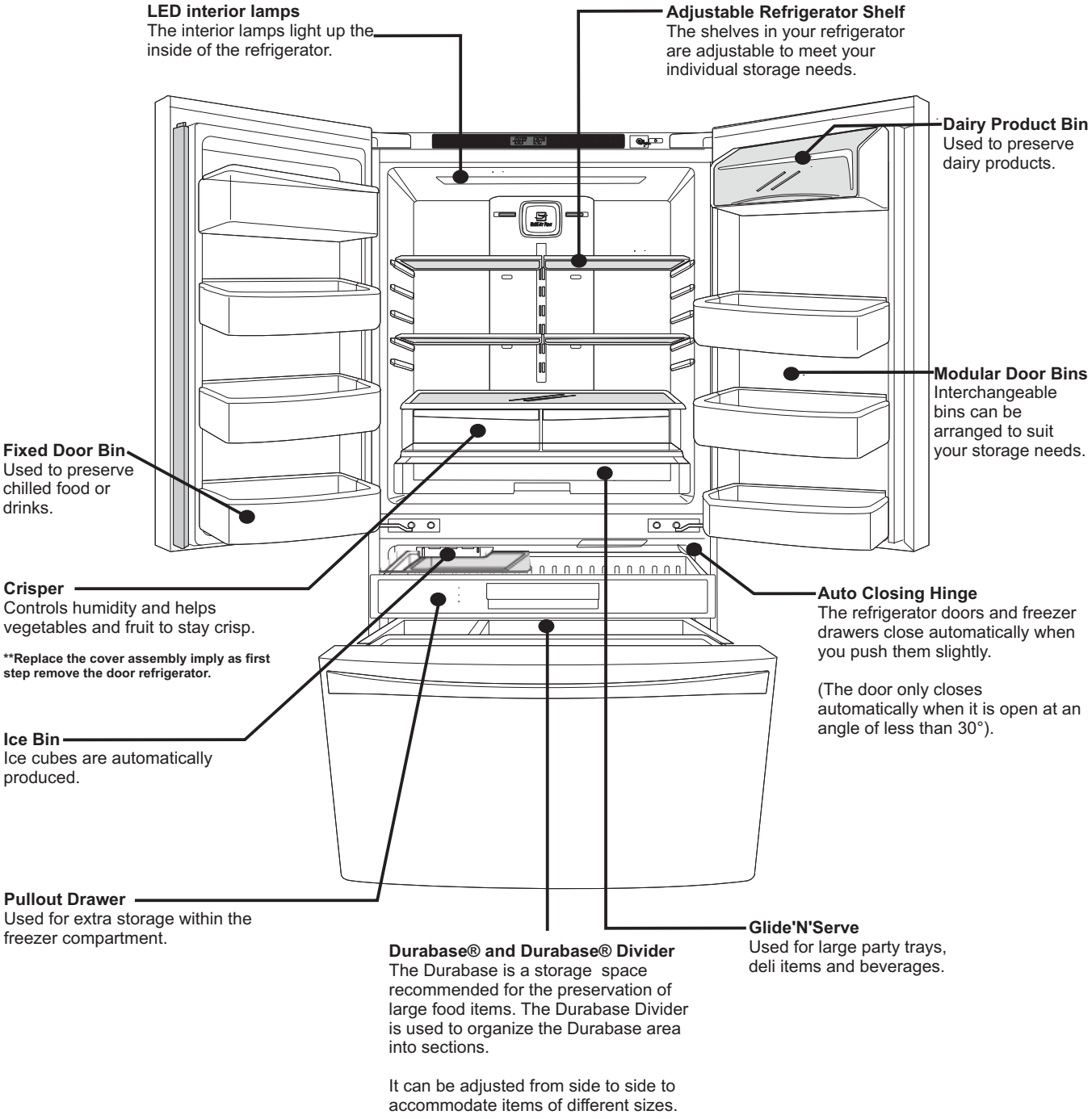

3. DISASSEMBLY

3-1 REMOVING AND REPLACING REFRIGERATOR DOOR

To remove and replace the refrigerator door:

⚠ **CAUTION:** Before you begin, remove food and bins from the doors.

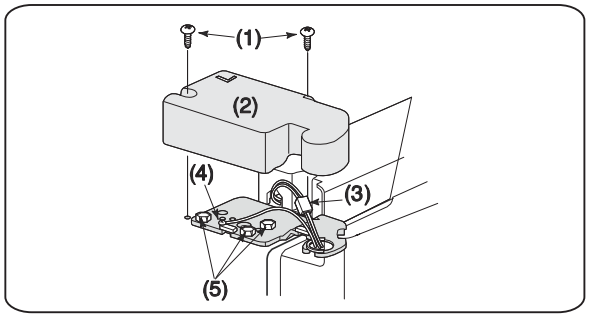

• Open the door. Remove the top hinge cover screw (1) and screw (1) and lift up the cover(2).
• Remove the cover.
• Disconnect wire harnesses (3).
• Remove the grounding screw (4).
• Using 10mm or 13/32-inch socket wrench, remove the 3 bolts and lift off the Top Hinge(5). Set parts aside.

IMPORTANT : When removing the bolts, be careful that the door does not fall forward.
• Lift the door from the middle hinge pin and remove the door.
• Place the door, inside facing up, on a non-scratching surface.
• Replace in the reverse order.

To remove the right refrigerator door:

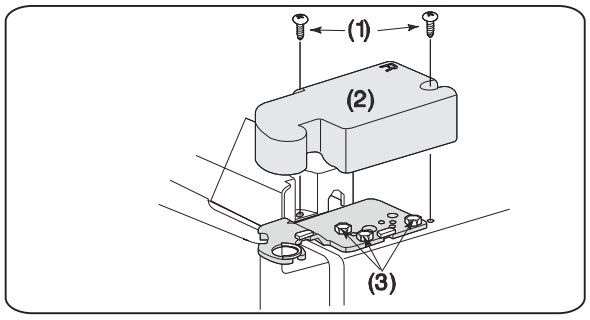

• Open the door. Remove the top hinge cover screw (1) and screw (1) and lift up the cover(2).
• Remove the cover.
• Disconnect wire harnesses (3).
• Remove the grounding screw (4).
• Using 10mm or 13/32-inch socket wrench, remove the 3 bolts and lift off the Top Hinge(5). Set parts aside.

IMPORTANT : When removing the bolts, be careful that the door does not fall forward.
• Lift the door from the middle hinge pin and remove the door.
• Place the door, inside facing up, on a non-scratching surface.
• Replace in the reverse order.

3-2 DOOR

• Mullion Removal

1. Remove 2 screws.

2. Lift mullion up carefully.

3. Disconnect wire harness.

• Door Gasket Removal

1. Remove gasket.
Pull gasket free from gasket channel of the four remaining sides of door.

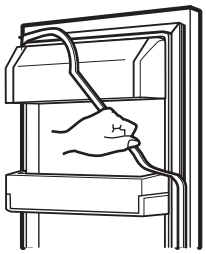

• Door Gasket Replacement

1. Insert gasket into channel
Press gasket into channels on the four remaining sides of door.

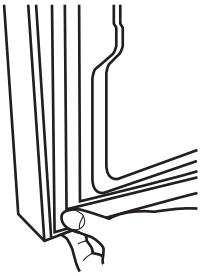

• Mullion Replacement

1. Connect wire harness.
2. Insert mullion into channel.
Inserting mullion assy' into bracket, door.
3. Assemble 2 screws.

• Mullion Replacement

1. Connect wire harness.

2. Insert mullion into channel.
Inserting mullion assy' into bracket, door.

3. Assemble 2 screws.

3-3 DOOR ALIGNMENT

<24cu.ft>
If the space between your doors is uneven, follow the instructions below to align the doors:
Turn the leveling legs (CCW) to raise or (CW) to lower the height of the front of the refrigerator by using flat blade screw driver or 11/32" wrench. Use the wrench (Included with the User Manual) to adjust the bolt in the door hinge to adjust the height. (CCW to raise or CW to lower the height).

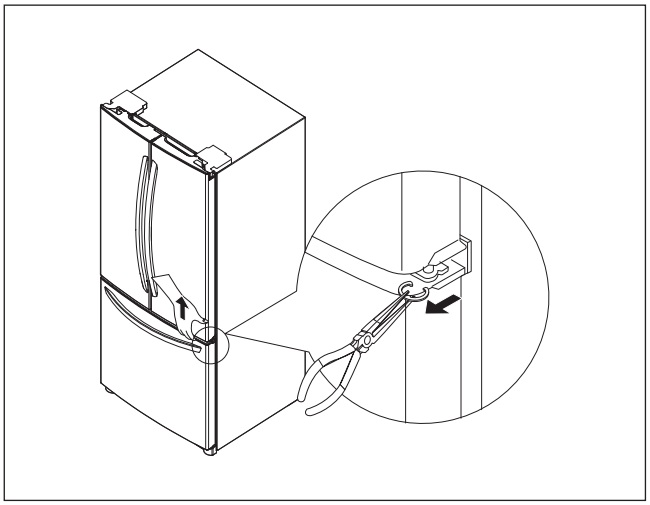

<22cu.ft>
If the space between your doors is uneven, follow the instructions below to align the doors
With one hand, lift up the door that you would like to raise at the middle hinge. With your other hand, use pliers to insert snap ring as shown. Insert additional snap rings until the doors are aligned.
(Three snap rings are provided with the refrigerator in the Use & Care Guide packet).

3-4 FAN AND FAN MOTOR(EVAPORATOR)

1. Remove the freezer drawer. (If your refrigerator has an icemaker, remove the icemaker first).
2. Remove the grille by pulling the grille forward.
3. Remove the Fan Motor assembly by loosening 3 screws and disassembling the shroud.
4. Pull out the fan and separate the Fan Motor and Bracket.

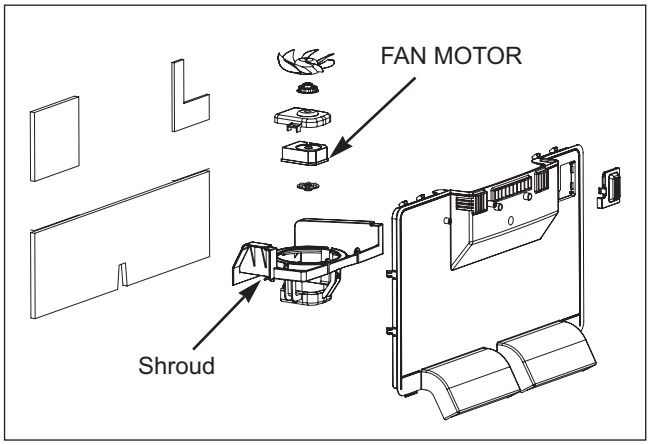

3-5 DEFROST CONTROL ASSEMBLY
Defrost Control assembly consists of Defrost Sensor and FUSE-M.
The Defrost Sensor works to defrost automatically. It is attached to the metal side of the Evaporator and senses its temperature. At 46F(8°C), it turns the Defrost Heater off.
Fuse-M is a safety device for preventing over-heating of the Heater when defrosting.
1. Pull out the grille assembly. (Figure 1)
2. Separate the connector with the Defrost Control assembly and replace the Defrost Control assembly after cutting the Tie Wrap. (Figure 2)

GRILLE ASSEMBLY

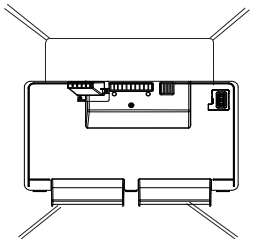

Figure 1

DEFROST-CONTROL ASSEMBLY

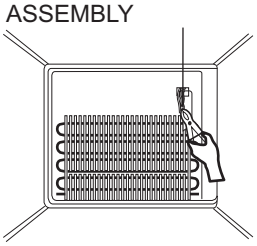

Figure 2

3-6 LAMP

Unplug Refrigerator, or disconnect power at the circuit breaker.
If necessary, remove top shelf or shelves.

3-6-1 Refrigerator Compartment Lamp

1) Unplug refrigerator power cord from electric outlet.
2) Put flat screwdriver into service hole and remove cover of refrigerator light.

3) Remove the LED assembly from connector.

4) Replace the LED assembly.

3-6-2 Freezer Compartment Lamp

1. Unplug refrigerator power cord form outlet.
2. Remove screw with driver.
3. Grasp the cover Lamp, pull the cover downward.

3-7 MULTI DUCT

1. Remove the upper and lower caps by using a flat screwdriver, and remove 2 screws. (Figure 3)
2. Disconnect the lead wire on the bottom position.

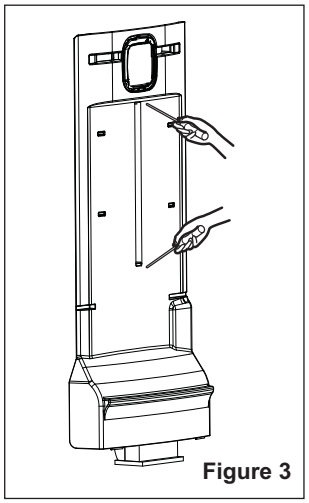
Figure 3

3-8 MAIN PWB

1) Loosen 3 screws on the PWB cover.

2) Remove the PWB cover.

3) Disconnect wire harness and replace the main PWB in the reverse order of removal.

3-9 HOW TO REMOVE AND REINSTALL THE PULLOUT DRAWER

Step 1) Open the freezer door.

Step 2) Remove the lower basket.

Step 3) Remove the two screws from the guide rails (one from each side).

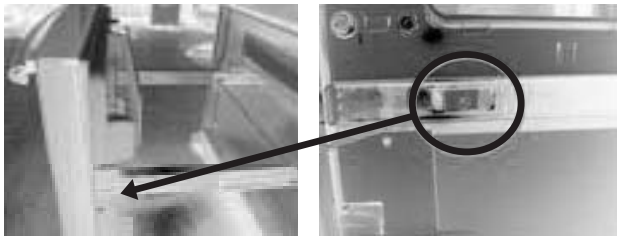

Step 4) Lift the freezer door up to unhook it from the rail support and remove.
Pull both rails to full extension.

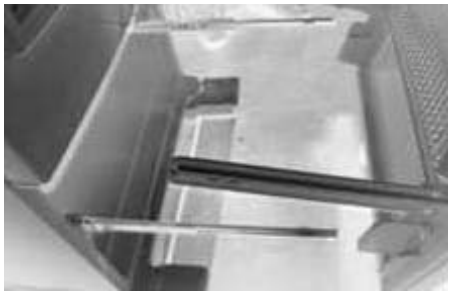

Step 5) First: Remove the gear from the left side first by releasing the tab behind the gear, place a screwdriver between the gear and the tab and pull up on the gear.
Second: Remove the center rail.
Third: Remove the gear from the right side by following the same steps for the left side.

NOTE: THIS TAB MUST BE PUSHED IN TO RELEASE THE GEAR.

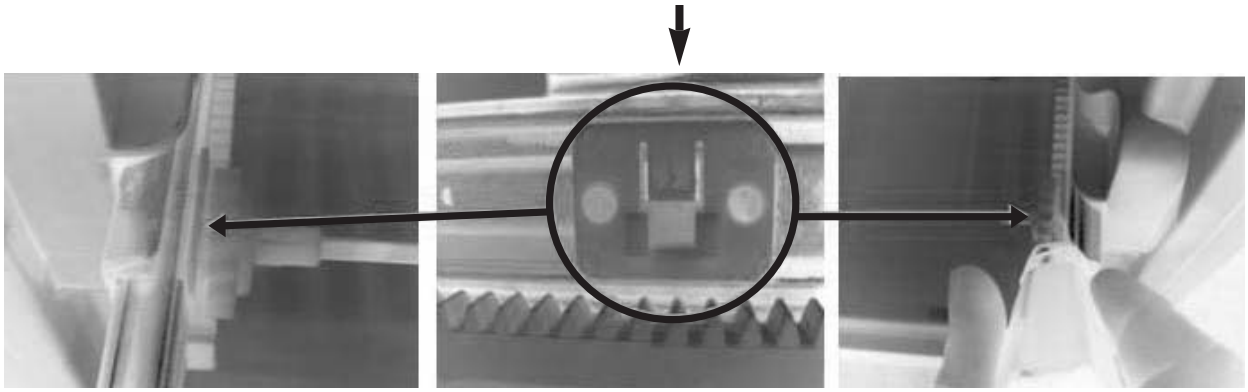

3-9-2 Follow Steps to Reinstall

Step 1) Reinstall the right side gear into the clip.

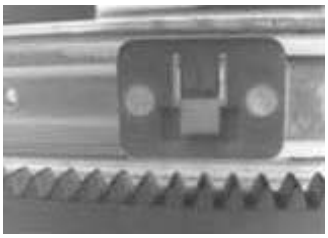

Step 2) Insert the rail into the right side gear. Gears do not need to be perpendicular to each other.

Step 3) Insert the rail into the left side gear, and insert the gear into the clip.

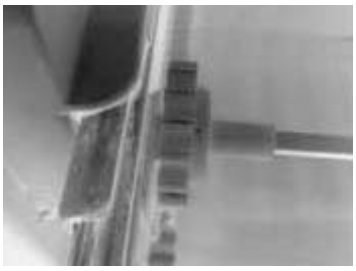

Step 4) The rail system will align itself by pushing the rails all the way into the freezer section.
Pull the rails back out to full extension.

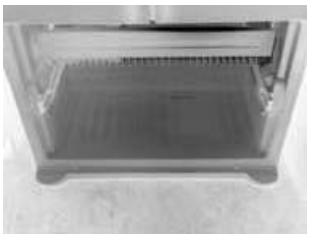

Step 5) Reinstall the freezer door by inserting the rail tabs into the guide rail.

Step 6) Reinstall the two screws into the guide rails (one from each side).

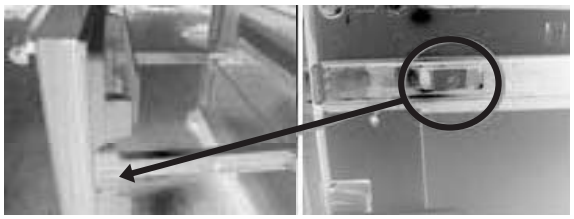

Step 7) Reinstall the lower basket, and close the freezer door.

3-10 PULL OUT DRAWER

Top Drawer
1. To remove the Top drawer.
Pull the drawer out to full extension. Lift the front of the drawer up, then pull it straight out.

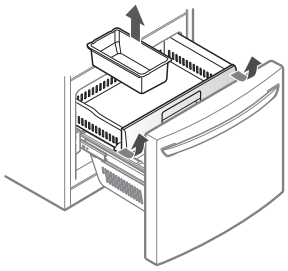

2. To install, slightly tilt up the front and insert the drawer into the frame and push it back into push it back place.

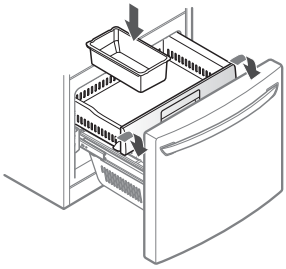

3-11 COVER T/V ASSEMBLY

1) Refer to sections “How to remove the left refrigerator door” and “How to remove the right refrigerator door” in order to move the doors and then replace the cover assembly t/v

2) Pull out the cover assembly t/v.

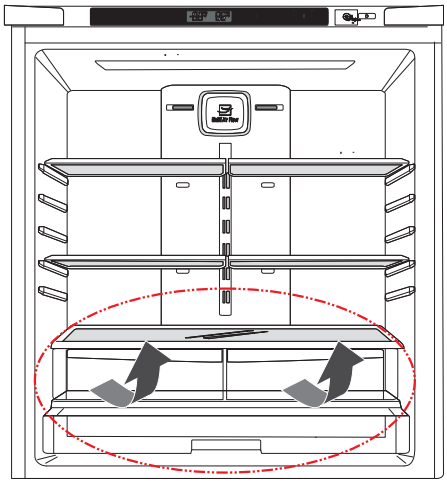

4. ADJUSTMENT

4-1 COMPRESSOR

4-1-1 Role
The compressor intakes low temperature and low pressure gas from the evaporator of the refrigerator and compresses this gas to high-temperature and high-pressure gas. It then delivers the gas to the condenser.

4-1-2Note for Usage
(1) Be careful not to allow over-voltage and over-current.
(2) Do not drop or handle carelessly.
(3) Keep away from any liquid.
If liquid such as oil or water enters the Cover PTC Compressor may fail due to breakdown of their insulating capabilities.
(4)Always use the Parts designed for the compressor and make sure it is properly attached to the compressor.
Parts may appear physically identical but could have different electrical ratings. Replace parts by part number and model number. Use only approved substitute parts.

4-1-3 Remove the cover PTC

(1)Remove the Cover Back M/C

(2)Remove two screws on comp base

(3)Use a L-shaped flap tool to pry off the cover.

(4)Assembly in reverse order of disassembly.

4-2-3 Compressor protection logic

Since linear Comp conducts linear reciprocating motion, we have protection logic for compressor, motor and PCB as the below.

- Stroke Trip
During the operation, if stroke is above the target value, decrease the target volt by 3V.

- Current Trip
Current trip is set in order to protect compressor mechanical part and drive from the overcurrent that might arise during the operation.
Check the current for every 416.7us and if the Trip exceeds 1.86Arms more than three times at Comp ON, forcibly stop and restart six minutes later.

- Lock Piston Trip
If stroke is under 5mm even if the current is more than 14Arms, Take it as ‘piston lock’ and restart after 2’30” of Comp OFF. Check the current and stroke for every 416.7us and if the condition fits more than three times at Comp ON, the Trip occurs.

- IPM fault Trip
It occurs if FO signal received from IPM is LOW. For every 416.7us, check whether FO signal is LOW. The tripoccurs if it is found three times during the five periods(83ms).

5. CIRCUIT DIAGRAM

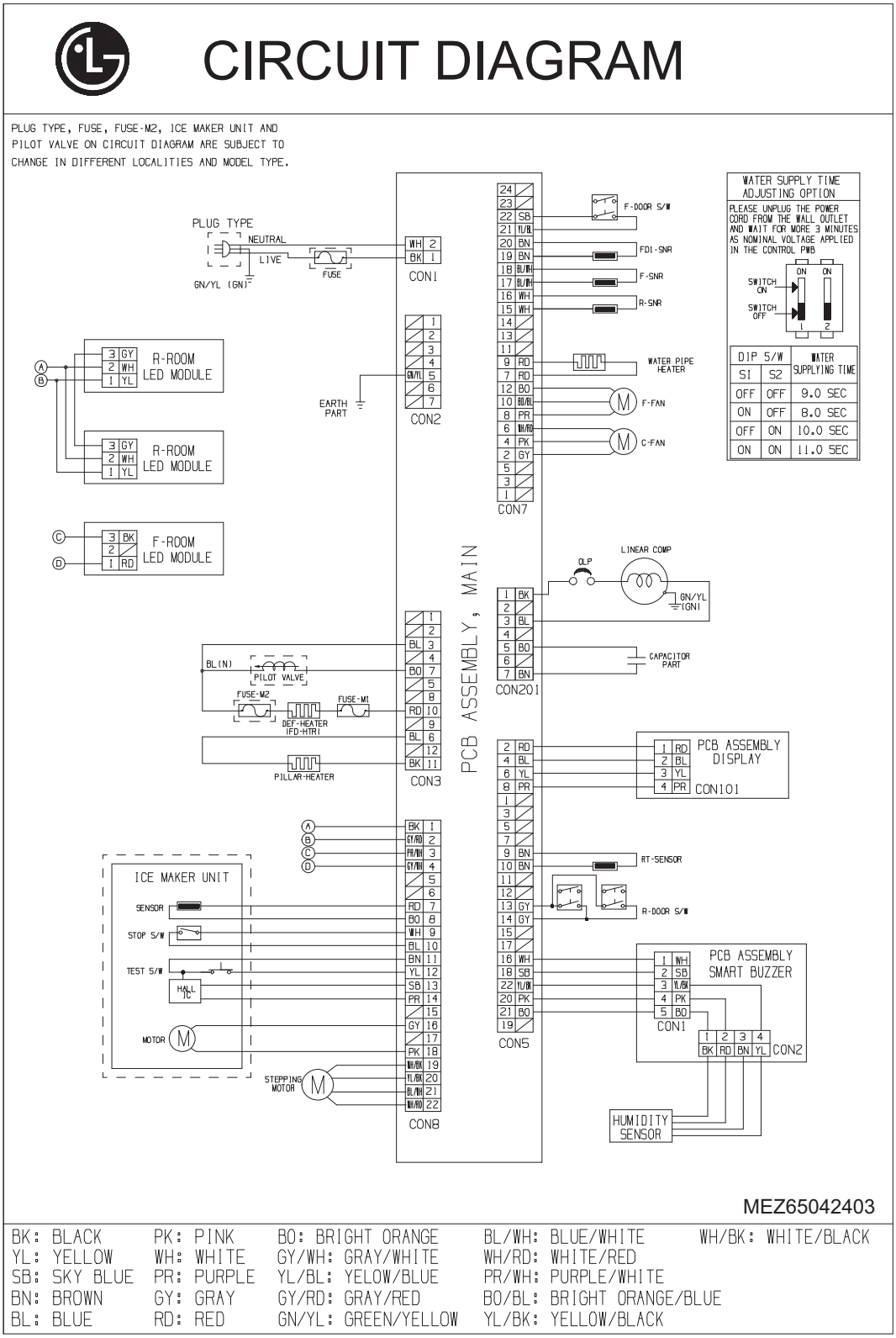

6. PCB PICTURE

6-1 Main PCB

P/No & MFG	Picture
Drawer **EBR770425**** **(2013.05~)**	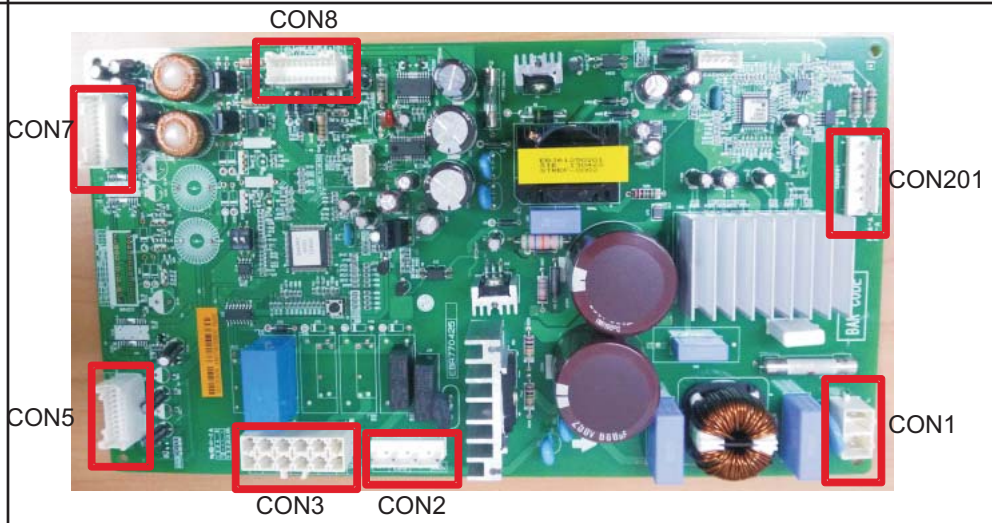
Swing **EBR766714**** **(2013.05~)**	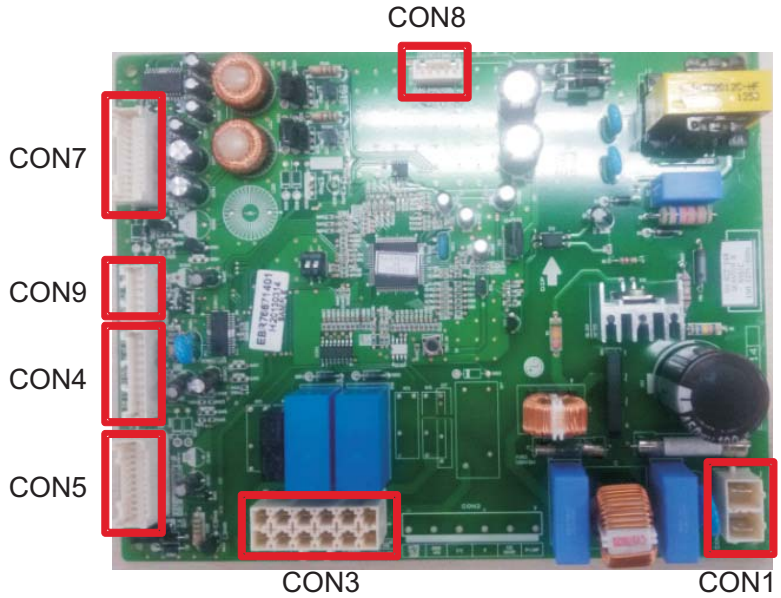

6-2 Display PCB & Sub PCB

P/No	Picture
EBR766839** (2013.05~)	 CON01

7. TROUBLESHOOTING WITH ERROR DISPLAY

7-1 Freezer Sensor Error (FS E)

No	Checking flow	Result & SVC Action
1	Check for loose connection in CON7.	
2	1-. Unplug connector from CON7. 2-. Check resistance between wires Blue/White to Blue/White. <Drawer Model> 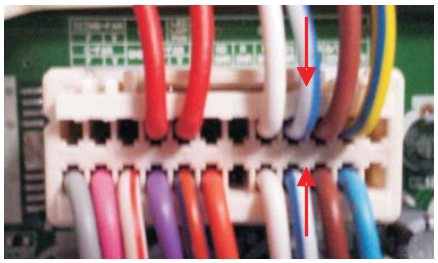 <Swing Model> 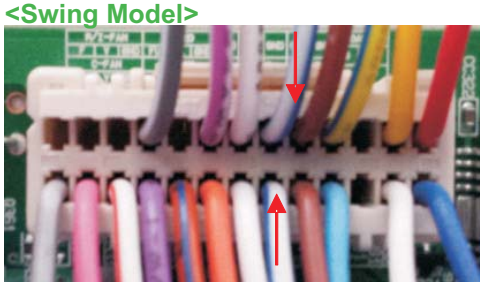	

Result		SVC Action
0 Ω	Short	Change the sensor
OFF	Open	Replace the refrigerator
Other	Normal	Check the Temp and resistance (Table-1)

<Temperature table-1>

Temperature	Result
-22°F / -30°C	40.5 ~ 38.5 kΩ
-13°F / -25°C	30.5 ~ 28.5 kΩ
-4°F / -20°C	23 ~ 21.5 kΩ
5°F / -15°C	17.5 ~ 16.5 kΩ
14°F / -10°C	13.5 ~ 12.5 kΩ
23°F / -5°C	10.5 ~ 9.5 kΩ
32°F / 0°C	8 ~7.5 kΩ

※ The sensor is determined by the temperature.
For example, 23kΩ indicates -4°F.

7-2 Refrigerator Sensor Error (rS E)

No	Checking flow	Result & SVC Action
1	Check for loose connection in CON7.	
2	1-. Unplug connector from CON7. 2-. Check resistance between wires White to White. <Drawer Model> 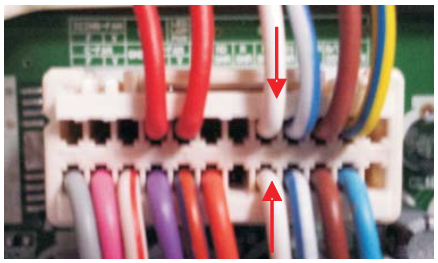 <Swing Model> 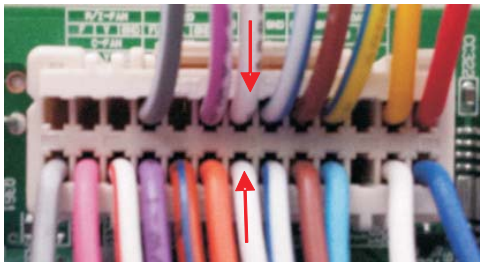	

Result		SVC Action
0 Ω	Short	Change the sensor
OFF	Open	Replace the refrigerator
Other	Normal	Check the Temp and resistance (Table-2)

<Temperature table-2>

Temperature	Result
23°F / -5°C	38.5 ~ 36.5 kΩ
32°F / 0°C	30.5 ~ 29.5 kΩ
41°F / 5°C	24.5 ~ 23.5 kΩ
50°F / 10°C	20 ~ 19 kΩ
59°F / 15°C	16 ~15.5 kΩ

※ The sensor is determined by the temperature.
For example, 30kΩ indicates 32°F.

7-3 Icing Sensor Error (IS E)

No	Checking flow	Result & SVC Action
1	Check for loose connection in CON8.	
2	<Drawer Model> 1-. Unplug connector from CON8. 2-. Check resistance between wires Red to Orange. 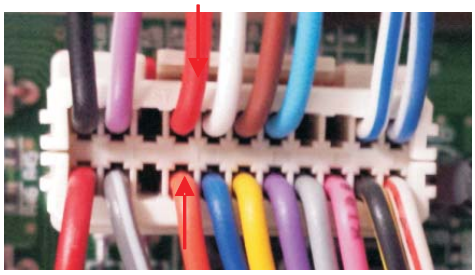 <CON8> <Swing Model> 1-. Unplug connector from CON4. 2-. Check resistance between wires Red to Orange. <CON4>	Result / SVC Action: 0 Ω — Short — Change the sensor OFF — Open — Replace the refrigerator Other — Normal — Check the Temp and resistance (Table-1) <Temperature table-1> Temperature / Result: -22°F / -30°C — 40.5 ~ 38.5 kΩ -13°F / -25°C — 30.5 ~ 28.5 kΩ -4°F / -20°C — 23 ~ 21.5 kΩ 5°F / -15°C — 17.5 ~ 16.5 kΩ 14°F / -10°C — 13.5 ~ 12.5 kΩ 23°F / -5°C — 10.5 ~ 9.5 kΩ 32°F / 0°C — 8 ~7.5 kΩ ※ The sensor is determined by the temperature. For example, 23kΩ indicates -4°F.

7-4 Defrost Sensor Error (dS E)

No	Checking flow	Result & SVC Action
1	 **Check for a loose connection.** 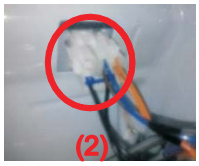	
2	**1. Check the wires <u>Orange to Orange</u>.** 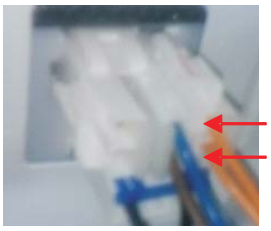 **2.- Check for loose connection in CON7 from Main PCB.** **3-. Unplug connector from <u>CON7</u>.** **4-. Check resistance between wires <u>Brown to Brown</u>.** **<Drawer Model>** 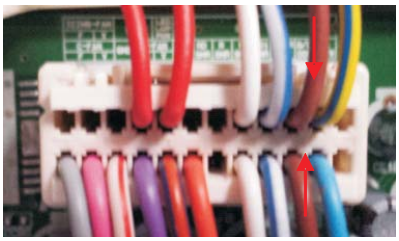 **<Swing Model>** 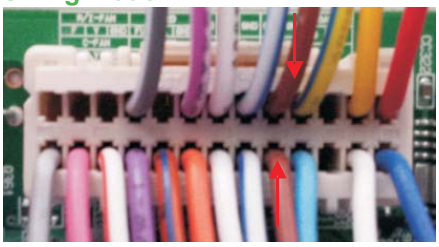 **<CON7>**	<table><tr><th colspan="2">Result</th><th>SVC Action</th></tr><tr><td>0 Ω</td><td>Short</td><td>Change the sensor</td></tr><tr><td>**OFF**</td><td>Open</td><td>Replace the refrigerator</td></tr><tr><td>**Other**</td><td>Normal</td><td>Check the Temp and resistance (Table-3)</td></tr></table> **<Temperature table-3>** <table><tr><th>Temperature</th><th>Result</th></tr><tr><td>23°F / -5°C</td><td>38.5 ~ 36.5 kΩ</td></tr><tr><td>32°F / 0°C</td><td>30.5 ~ 29.5 kΩ</td></tr><tr><td>41°F / 5°C</td><td>24.5 ~ 23.5 kΩ</td></tr><tr><td>50°F / 10°C</td><td>20 ~ 19 kΩ</td></tr><tr><td>59°F / 15°C</td><td>16 ~15.5 kΩ</td></tr></table> **※ The sensor is determined by the temperature.** **For example, 23kΩ indicates -4°F.**

7-5 Defrost Heater Error (dH E)

No	Checking flow	Result & SVC Action
1	Check the Door gasket.	
2	1.- Check for loose connection in defrost control part connector. 2-. Check resistance of defrost control part. 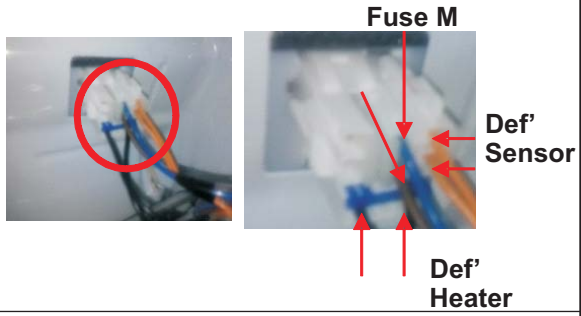 	
3	Input Test 3 Mode. (Push the button 3 times)	
4	1.- Check for loose connection in CON3. 2-. Check voltage between wires Blue to Red. <Drawer Model> 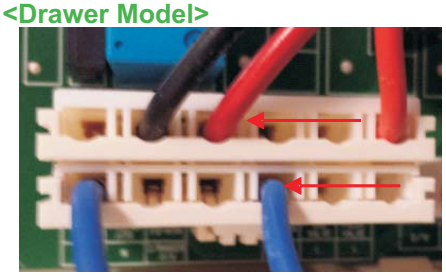 <Swing Model> 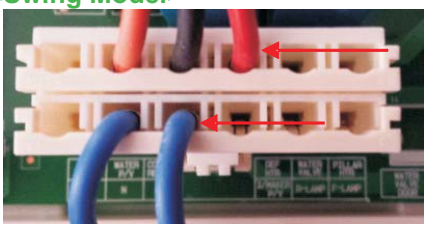	
5	Release the test mode. Push the button 1 times. (Normal)	

Part	Result	SVC Action
Fuse-M	0 Ω	Go to the 3
	Other	Change Fuse-M
Def' Heater	34 ~ 42 Ω	Go to the 3
	Other	Change Fuse-M
Def' Sensor	21 Ω↓	Go to the 3
	Other	Go to the 5

Result	SVC Action
112 ~ 116 V	Go to the 5
0 V	Replace Main PCB

7-5 Defrost Heater Error (dH E)

No	Checking flow	Result & SVC Action
6	**Check voltage between wires <u>Blue to Red</u>.** **<Drawer Model>** 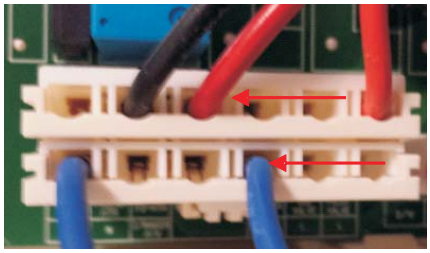 **<Swing Model>** 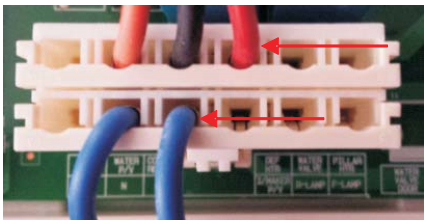	<table><tr><th>Result</th><th>SVC Action</th></tr><tr><td>0 V</td><td>Explain to customer</td></tr><tr><td>112 ~ 116 V</td><td>Replace Main PCB</td></tr></table>

7-6 Freezer Fan Error (FF E)

No	Checking flow	Result & SVC Action
1	**Reset the unit and Input Test 1 Mode. (Push the button 1 time)**	
2	**Open the freezer door and Check the air flow. ※ While an error code is displayed, the fan is not working.**	
3	**Check the <u>Fan motor</u>.** 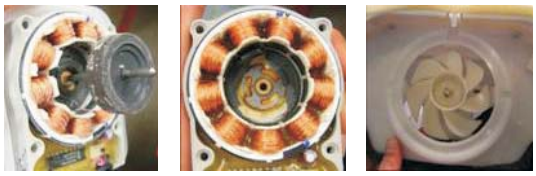	**Rotate fan using your hand. It feel sticky, change the motor. (Cause of ice or rust inside of motor)**
4	**1.- Check for loose connection in <u>CON7</u>. 2-. Check fan motor voltage.** **<Drawer Model>** 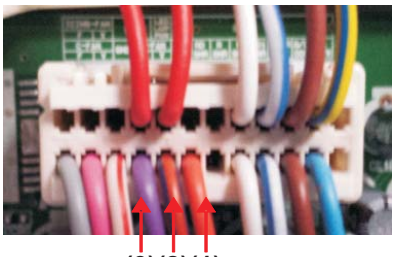 **(3)(2)(1)** **<Swing Model>** 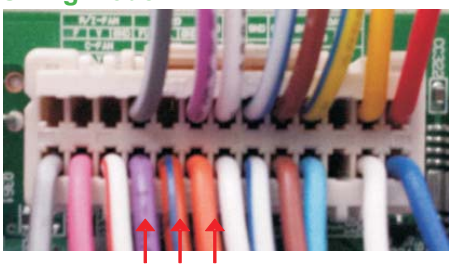 **(3)(2)(1)**	

Status	SVC Action
No windy	Go to 3
Windy	Go to 4

Point	Result	SVC Action
(2)~(3)	Below 7V	Change the PCB
(1)~(3)	0 or 5 V	Change the motor

7-7 Condenser Fan Error (CF E)

No	Checking flow	Result & SVC Action
1	**Reset the unit and Input Test 1 Mode. (Push the button 1 time)**	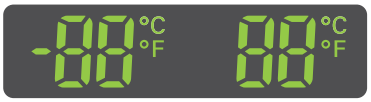
2	**Check the fan rotating.** **※ While an error code is displayed, the fan is not working.**	
3	**Check the Fan motor and surrounding.** 	**Rotate fan using your hand. It feel sticky, change the motor.**
4	**1.- Check for loose connection in CON7. 2-. Check condenser motor voltage.** **<Drawer Model>** 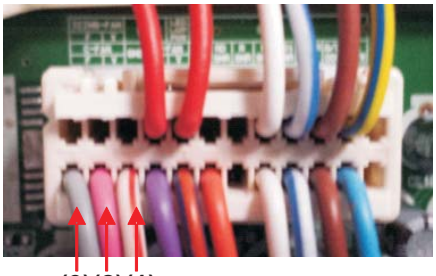 **(3)(2)(1)** **<Swing Model>** 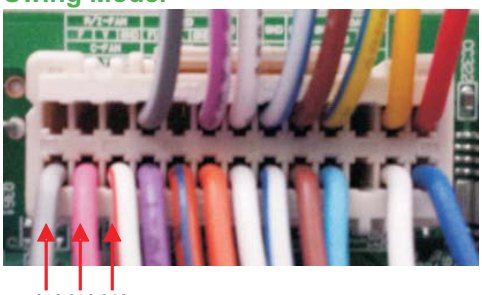 **(3)(2)(1)**	

Status	SVC Action
No windy	Check motor
Windy	Go to the 4

	Result	SVC Action
(2)~(3)	Below 7V	Change the PCB
(1)~(3)	0 or 5 V	Change the motor

7-8 Communication Error (CO E)

No	Checking flow	Result & SVC Action
1	**Check for loose connection in CON101 from PCB Display.**	
2	**Check voltage between wires Red to Blue.** **CON101** **<CON101>** **<Display>**	**Result** / **SVC Action** 12 V — Go to the 3 Other — Check the Hinge (loose connection) Change the Main PCB
3	**Check voltage between wires Blue to Yellow.** **CON101** **<CON101>** **<Display>**	**Result** / **SVC Action** 0 V or 5 V — Change the Display PCB Other — Go to the 4
4	**Check voltage between wires Blue to Purple.** **CON101** **<Display>** **<CON101>**	**Result** / **SVC Action** 0 V or 5 V — Change the Main PCB Other — Go to the 5
5	**1.- Check for loose connection in CON5 from Main PCB.** **2.- Check voltage between wires Blue to Yellow.** **<Drawer Model>** 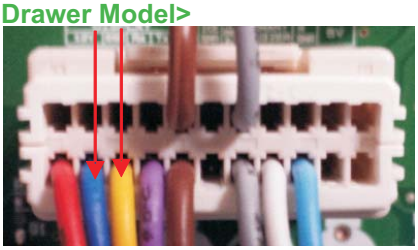 **<Swing Model>** 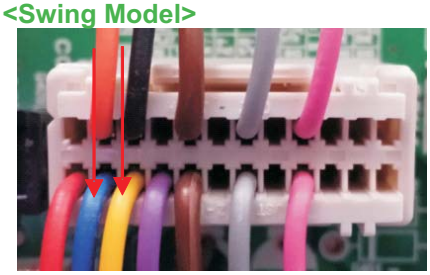	**Result** / **SVC Action** 0 V or 5 V — Change the Display PCB Other — Go to the 6

7-8 Communication Error (CO E)

No	Checking flow	Result & SVC Action
6	**Check voltage between wires <u>Blue to Purple</u>.** **<Drawer Model>** 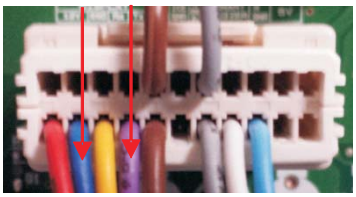 **<Swing Model>** 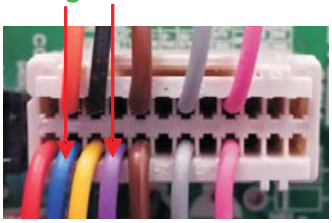	<table><tr><th>Result</th><th>SVC Action</th></tr><tr><td>0 V or 5 V</td><td>Change the Main PCB</td></tr><tr><td>Other</td><td>Explain to customer</td></tr></table>

8. TROUBLESHOOTING WITHOUT ERROR DISPLAY

8-1 Freezer room LED Lamp doesn't work

<table>
<tr><th>No</th><th>Checking flow</th><th>Result & SVC Action</th></tr>
<tr><td>1</td><td>Check the Freezer door switch.
 </td><td>If feel sticky, Change the door s/w.</td></tr>
<tr><td>2</td><td>Check the door S/W resistance.
 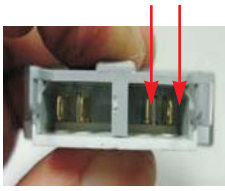 </td><td><table><tr><th>Status</th><th>Result</th><th>SVC Action</th></tr><tr><td rowspan="2">Normal</td><td>0 Ω</td><td>Go to the 3</td></tr><tr><td>not</td><td>Change door S/W</td></tr><tr><td rowspan="2">Push S/W</td><td>Infinity</td><td>Go to the 3</td></tr><tr><td>Other</td><td>Change door S/W</td></tr></table></td></tr>
<tr><td>3</td><td><Drawer Model>
1.- Check for loose connection in CON8.
2-. Check voltage between wires Purple/White to Gray/White.
 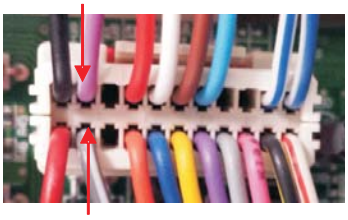
<CON8>
<Swing Model>
1.- Check for loose connection in CON7.
2-. Check voltage between wires Purple/White to Gray/White.
 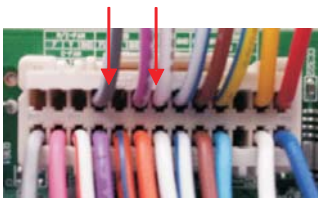 </td><td><table><tr><th>Status</th><th>Result</th><th>SVC Action</th></tr><tr><td rowspan="2">Normal</td><td>12 V</td><td>Go to the 4</td></tr><tr><td>Other</td><td>Change the PCB</td></tr></table></td></tr>
<tr><td>4</td><td>1.- Check for loose connection in Freezer LED Lamp connector.
2-. Check voltage between wires Red to Black.
 </td><td><table><tr><th>Status</th><th>Result</th><th>SVC Action</th></tr><tr><td rowspan="2">Closed</td><td>0~2 VDC</td><td>Explain to customer</td></tr><tr><td>Other</td><td>Change the Door S/W</td></tr><tr><td rowspan="2">Open</td><td>12 VDC</td><td>Explain to customer</td></tr><tr><td>Other</td><td>Change the LED Lamp</td></tr></table></td></tr>
</table>

8-2 Refrigerator room LED Lamp doesn't work

<table>
<tr><th>No</th><th>Checking flow</th><th>Result & SVC Action</th></tr>
<tr><td>1</td><td>Check the Refrigerator door switch.
 </td><td>If feel sticky, Change the door s/w.</td></tr>
<tr><td>2</td><td>Check the door Switch resistance.
 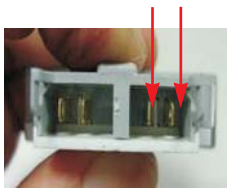 </td><td>
<table>
<tr><th>Status</th><th>Result</th><th>SVC Action</th></tr>
<tr><td rowspan="2">Normal</td><td>0 Ω</td><td>Go to the 3</td></tr>
<tr><td>Other</td><td>Change door Switch</td></tr>
<tr><td rowspan="2">Push S/W</td><td>Infinity</td><td>Go to the 3</td></tr>
<tr><td>Other</td><td>Change door Switch</td></tr>
</table>
</td></tr>
<tr><td>3</td><td><Drawer Model>
1.- Check for loose connection in CON8.
2-. Check voltage between wires Black to Gray/Red .
 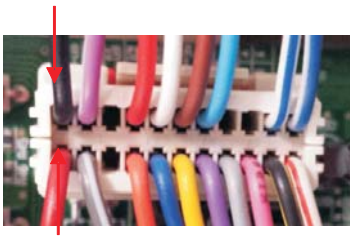
<CON8>
<Swing Model>
1.- Check for loose connection in CON5.
2-. Check voltage between wires Black to Orange.
 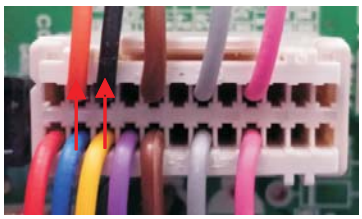
<CON5></td><td>
<table>
<tr><th>Status</th><th>Result</th><th>SVC Action</th></tr>
<tr><td rowspan="2">Normal</td><td>12 V</td><td>Go to the 4</td></tr>
<tr><td>Other</td><td>Change the PCB</td></tr>
</table>
</td></tr>
</table>

8-2 Refrigerator room lamp doesn't work

<table>
<tr><th>No</th><th>Checking flow</th><th>Result & SVC Action</th></tr>
<tr><td>4</td><td>1.- Check for loose connection in Refrigerator LED Lamp connector.
2-. Check voltage between wires <u>White to Gray</u>.
 </td><td>
<table>
<tr><th>Status</th><th>Result</th><th>SVC Action</th></tr>
<tr><td rowspan="2">Closed</td><td>0 ~ 2 V</td><td>Explain to customer</td></tr>
<tr><td>Other</td><td>Change the Door S/W</td></tr>
<tr><td rowspan="2">Open</td><td>12 V</td><td>Explain to customer</td></tr>
<tr><td>Other</td><td>Change the LED Lamp</td></tr>
</table>
</td></tr>
<tr><td></td><td></td><td></td></tr>
</table>

8-3 Poor cooling in Fresh food section

<table>
<tr><th>No</th><th>Checking flow</th><th>Result & SVC Action</th></tr>
<tr><td>1</td><td>1-. Unplug connector from <u>CON7</u>.
2-. Check resistance between wires <u>White to White</u>.

<Drawer Model>
 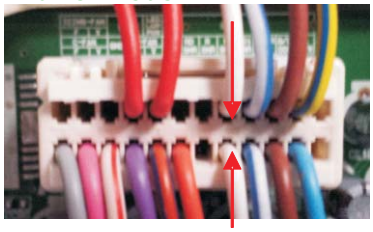

<Swing Model>
 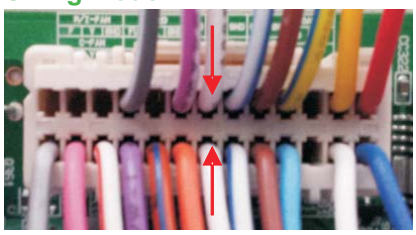

※ The sensor is determined by the temperature.
For example, 30kΩ indicates 32°F.</td><td><table><tr><th>Temperature</th><th>Result</th></tr><tr><td>23°F / −5°C</td><td>38 kΩ</td></tr><tr><td>32°F / 0°C</td><td>30 kΩ</td></tr><tr><td>41°F / 5°C</td><td>24 kΩ</td></tr><tr><td>50°F / 10°C</td><td>19.5 kΩ</td></tr><tr><td>59°F / 15°C</td><td>16 kΩ</td></tr></table></td></tr>
<tr><td>2</td><td>Reset the unit and
Input Test 1 Mode.
(Push the button 1 time)</td><td> </td></tr>
<tr><td>3</td><td>Open the fresh food door and Check the air flow.
 </td><td><table><tr><th>Status</th><th>SVC Action</th></tr><tr><td>Windy</td><td>Go to the 4</td></tr><tr><td>No windy</td><td>Check the F Fan motor
Check the damper
(Go to the 5)</td></tr></table></td></tr>
<tr><td>4</td><td>Check the air temperature.
Cold or not ?</td><td><table><tr><th>Status</th><th>SVC Action</th></tr><tr><td>Cold</td><td>Explain to customer</td></tr><tr><td>Not cold</td><td>Check the Compressor
And sealed system</td></tr></table></td></tr>
</table>

8-4 Poor cooling in Freezer compartment

<table>
<tr><th>No</th><th>Checking flow</th><th>Result & SVC Action</th></tr>
<tr><td>1</td><td>1-. Unplug connector from CON7.
2-. Check resistance between wires Blue/White to Blue/White.
<Drawer Model>
 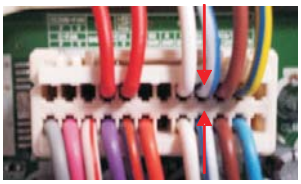
<Swing Model>
 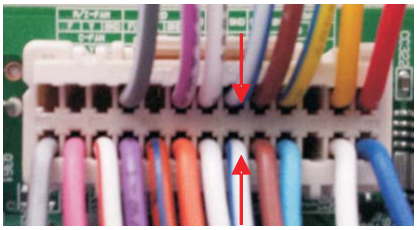
※ The sensor is determined by the temperature.
For example, 23㎏Ω indicates -4°F.</td><td><table><tr><th>Temperature</th><th>Result</th></tr><tr><td>-22°F / −30°C</td><td>40 ㎏Ω</td></tr><tr><td>-13°F / −25°C</td><td>30 ㎏Ω</td></tr><tr><td>-4°F / −20°C</td><td>23 ㎏Ω</td></tr><tr><td>5°F / −15°C</td><td>17 ㎏Ω</td></tr><tr><td>14°F / −10°C</td><td>13 ㎏Ω</td></tr><tr><td>23°F / −5°C</td><td>10 ㎏Ω</td></tr><tr><td>32°F / 0°C</td><td>8 ㎏Ω</td></tr></table></td></tr>
<tr><td>2</td><td>Reset the unit and
Input Test 1 Mode.
(Push the button 1 time)</td><td> 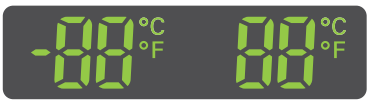 </td></tr>
<tr><td>3</td><td>Open the freezer door and Check the air flow.
 </td><td><table><tr><th>Status</th><th>SVC Action</th></tr><tr><td>Windy</td><td>Go to the 4</td></tr><tr><td>No windy</td><td>Check the F Fan motor
(Go to the 5)</td></tr></table></td></tr>
<tr><td>4</td><td>Check the air temperature.
Cold or not ?</td><td><table><tr><th>Status</th><th>SVC Action</th></tr><tr><td>Cold</td><td>Explain to customer</td></tr><tr><td>Not cold</td><td>Check the Compressor
And sealed system</td></tr></table></td></tr>
</table>

<table>
<tr><th>No</th><th>Checking flow</th><th>Result & SVC Action</th></tr>
<tr><td>5</td><td>

Check the Fan motor.
Rotate fan using your hand.
It feel sticky, change the motor.
(cause of ice or rust inside of motor).

</td><td>

Point	Result	SVC Action
Motor	Sticky	Change the motor

</td></tr>
<tr><td>6</td><td>

1.- Check for loose connection in CON7.
2-. Check fan motor voltage.

<Drawer Model>

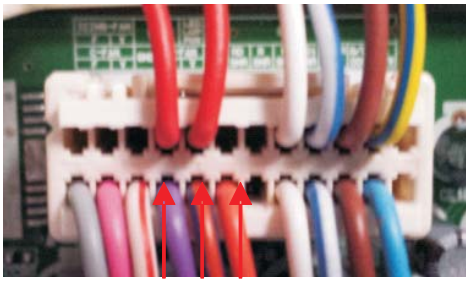

(3) (2) (1) <CON7>

<Swing Model>

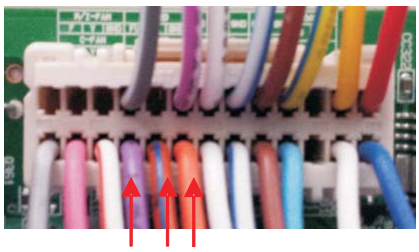

(3)(2)(1)

</td><td>

Point	Result	SVC Action
(1) ~ (2)	Below 12 V	Change the PCB
(1) ~ (3)	0 or 5 V	Change the motor

</td></tr>
</table>

9. REFERENCE

9-1 TEST MODE and Removing TPA

1. How to make TEST MODE

If you push the test button on the Main PCB, the refrigerator will be enter the TEST MODE.

Main PCB

<Drawer Model>

<Swing Model>

∗ 1 time : Comp / Damper / All FAN on
(All things displayed)

∗ 2 times : Damper closed
(22 22 displayed)

∗ 3 times : Forced defrost mode
(33 33 displayed)

2. How to remove Terminal Position Assurance (TPA)

<AC TPA>

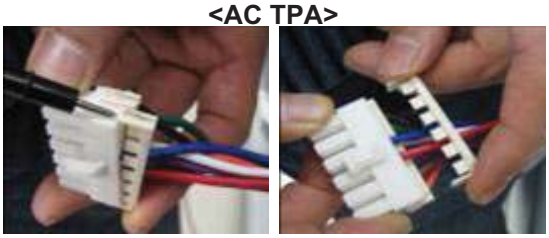

<DC TPA>

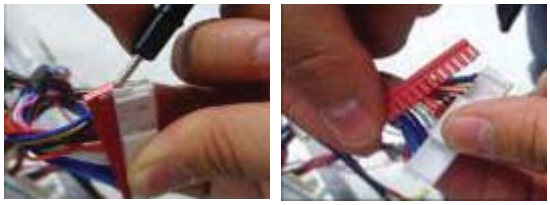

※ After measure the values, you should put in the TPA again.

9-2 TEMPERATURE CHART - FRZ AND ICING SENSOR

TEMP	RESISTANCE	VOLTAGE
-39°F (-40°C)	73.29 kΩ	4.09 V
-30°F (-35°C)	53.63 kΩ	3.84 V
-21°F (-30°C)	39.66 kΩ	3.55 V
-13°F (-25°C)	29.62 kΩ	3.23 V
-4°F (-20°C)	22.33 kΩ	2.89 V
5°F (-15°C)	16.99 kΩ	2.56 V
14°F (-10°C)	13.05 kΩ	2.23 V
23°F (-5°C)	10.10 kΩ	1.92 V
32°F (0°C)	7.88 kΩ	1.63 V
41°F (5°C)	6.19 kΩ	1.38 V
50°F (10°C)	4.91 kΩ	1.16 V
59°F (15°C)	3.91 kΩ	0.97 V
68°F (20°C)	3.14 kΩ	0.81 V
77°F (25°C)	2.54 kΩ	0.67 V
86°F (30°C)	2.07 kΩ	0.56 V
95°F (35°C)	1.69 kΩ	0.47 V
104°F (40°C)	1.39 kΩ	0.39 V

9-3 TEMPERATURE CHART - REF AND DEF SENSOR

TEMP	RESISTANCE	VOLTAGE
-39°F (-40°C)	225.1 kΩ	4.48 V
-30°F (-35°C)	169.8 kΩ	4.33 V
-21°F (-30°C)	129.3 kΩ	4.16 V
-13°F (-25°C)	99.30 kΩ	3.95 V
-4°F (-20°C)	76.96 kΩ	3.734 V
5°F (-15°C)	60.13 kΩ	3.487 V
14°F (-10°C)	47.34 kΩ	3.22 V
23°F (-5°C)	37.55 kΩ	2.95 V
32°F (0°C)	30 kΩ	2.67 V
41°F (5°C)	24.13 kΩ	2.40 V
50°F (10°C)	19.53 kΩ	2.14 V
59°F (15°C)	15.91 kΩ	1.89 V
68°F (20°C)	13.03 kΩ	1.64 V
77°F (25°C)	10.74 kΩ	1.45 V
86°F (30°C)	8.89 kΩ	1.27 V
95°F (35°C)	7.40 kΩ	1.10 V
104°F (40°C)	6.20 kΩ	0.96 V

9-4 HOW TO CHECK THE FAN-ERROR

After sending a signal to the fan, the MICOM checks the BLDC fan motor s lock status. If there is no feedback signal from the BLDC fan, the fan motor stops for 10 seconds and then is powered again for 15 seconds. To determine that there is a fan motor malfunction, this process is repeated 3 times. If the fan motor is determined to be defective, the error code will be shown in the display for 30 minutes.
At this point, the process will be repeated until the fan motor operates normally. If normal operation is achieved, the error display is erased and the MICOM is reset automatically.

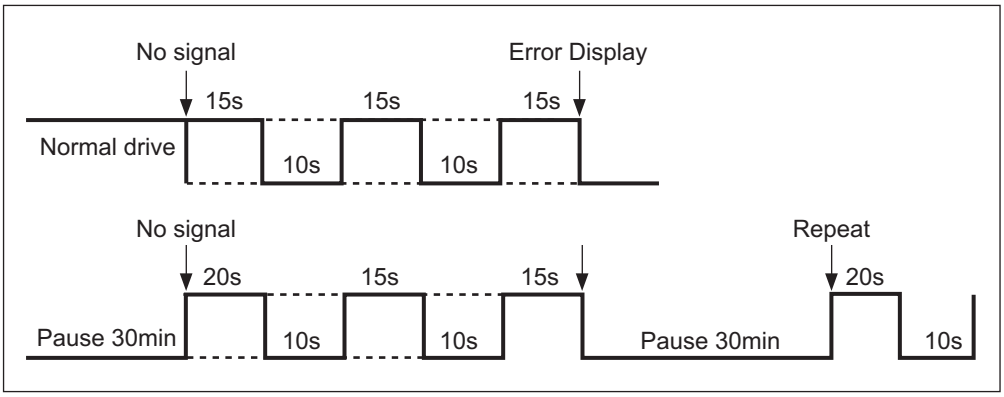

10. COMPONENT TESTING INFORMATION

10-1 Defrost Controller Assembly

<table>
<tr><td>Function</td><td>- Controller assembly is consist of 2 kinds of part those are fuse-m and sensor. we can decide part is defect or not when we check the resistance.
- Fuse-m can cut off the source when defrost heater operate the unusual high temperature.
- Sensor give temperature information to Micom</td></tr>
<tr><td>How to Measure (Fuse-M)</td><td> 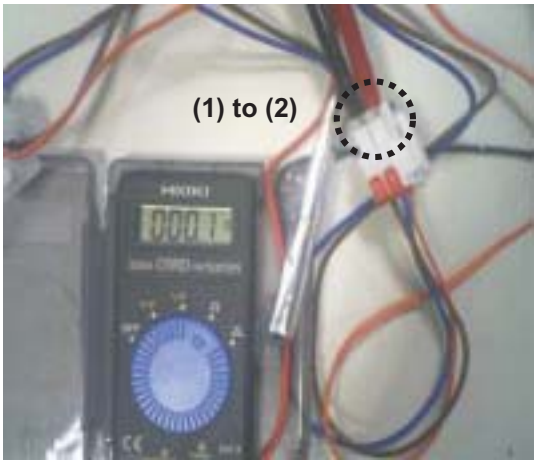

Set a ohmmeter to the 2 housing pin.
Measure the 2 pin connected to Fuse-M.
If the ohmmeter indicate below 0.1ohm fuse-m is a good condition, But infinitely great ohm Fuse-M is disconnection</td></tr>
<tr><td>How to Measure (Sensor)</td><td>

Set a ohmmeter to The 2housing pin.
Measure the 2 pin connected to Sensor.
If the ohmmeter indicate 11㎏ (at room temperature) Sensor is not a defect.
When check the ohm at other temperature Check the sensor manual.</td></tr>
<tr><td>Standard</td><td>Fuse-M (at all temperature)
<table>
<tr><td>Test Point</td><td>Ressult</td></tr>
<tr><td>(1) to (2)</td><td>0 ~ 0.1Ω</td></tr>
</table>
Sensor (at room temperature)
<table>
<tr><td>Test Point</td><td>Ressult</td></tr>
<tr><td>(1) to (2)</td><td>11Ω</td></tr>
</table></td></tr>
</table>

10-2 Sheath Heater

Function	Sheath heater is a part for defrost. All heating wire is connected to only one line. So we can decide part is defect or not when we check the resistance.
How to Measure	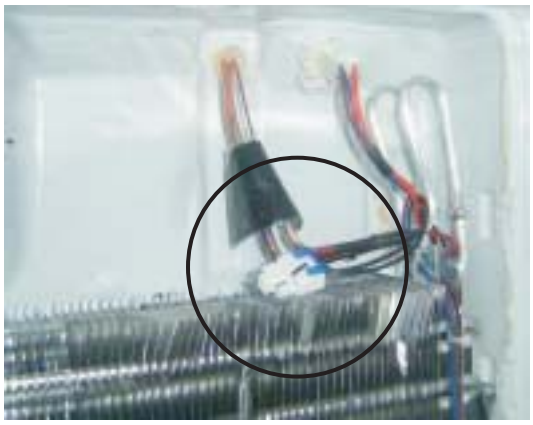 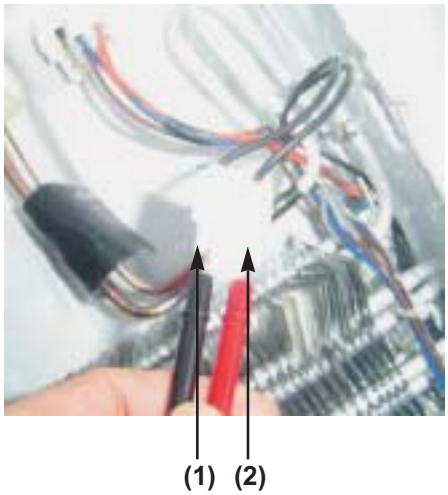 Set a ohmmeter connect to The 2 housing pin. Measure the 2 pin connected to Sheath Heater. If the ohmmeter indicate (V°øV)/Watt=R is good condition, ex) when watt=350w, voltage=115v R=(115°ø115)/350=38 **Ω** But the ohmmeter indicate infinitely great Sheath heater is disconnection
Standard	**Sheath heater (at all temperature)** Test Point: (1) to (2) Ressult: 34 ~ 42**Ω**

10-3 Damper

Function

The damper supplies the cold air from the freezer to the refrigerator section.

How to Measure

Table(1): 결선도(Wirering)

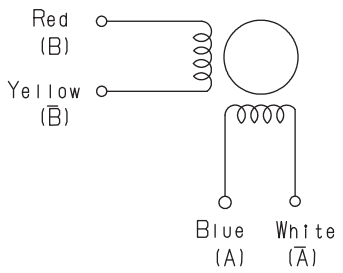

Table(2): 2-2상 여자순서(CW Rotation)

Housing No. & L/Wire Color	Step			
	1	2	3	4
1- Blue (A)	+	-	-	+
2- Red (B)	+	+	-	-
3- White($\bar{A}$)	-	+	+	-
4- Yellow($\bar{B}$)	-	-	+	+

< Damper Circuit >

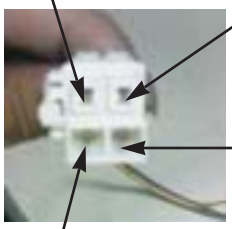

Check the 1, 3

< extension >

Check the 2, 4

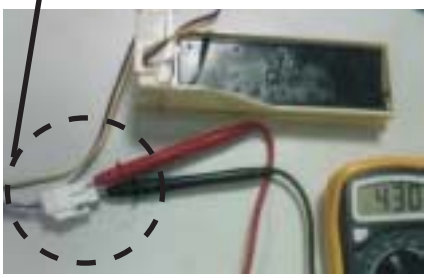

Check the 1, 3

Check the resistance between connectors 1,3 and 2,4 .It means check whether or not applying an electric current. If there is resistance, it means the damper not inferiority

Standard

Damper

Test Points	Result
Red and Yellow	373 ~ 456Ω

Test Points	Result
Blue and White	373 ~ 456Ω

10-4 Door Switch

Function	The switch sense if the door open or close. - When the door open, light on. - When the door open, the switch give information to Micom. When the door open, internal contact operate on and off moving plunger of door switch up and down.
How to Measure	**<Switch, Freezer>** **<Switch, Refrigerator>** **Button (Plunger)** 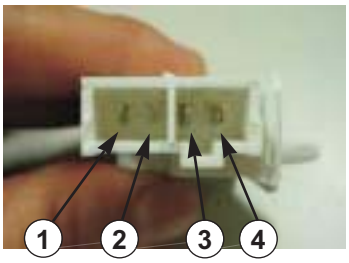 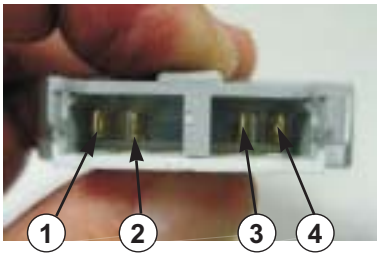 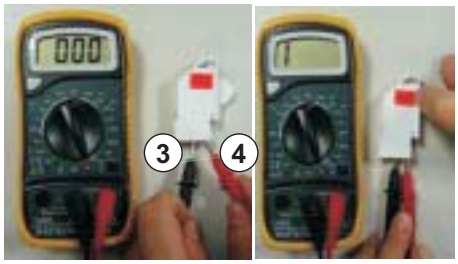 **Beep** **Beep** Check the resistance between connectors 1, 2 and 3, 4 .It means check whether or not applying an electric current. If there is resistance, it means the switch not inferiority
Standard	**Multimeter beep – Switch F,R** Nomal: Push the button(Plunger) Beep or 0Ω: None (∞Ω)

11. COMPRESSOR TROUBLESHOOTING

PCB Check (Simplify)

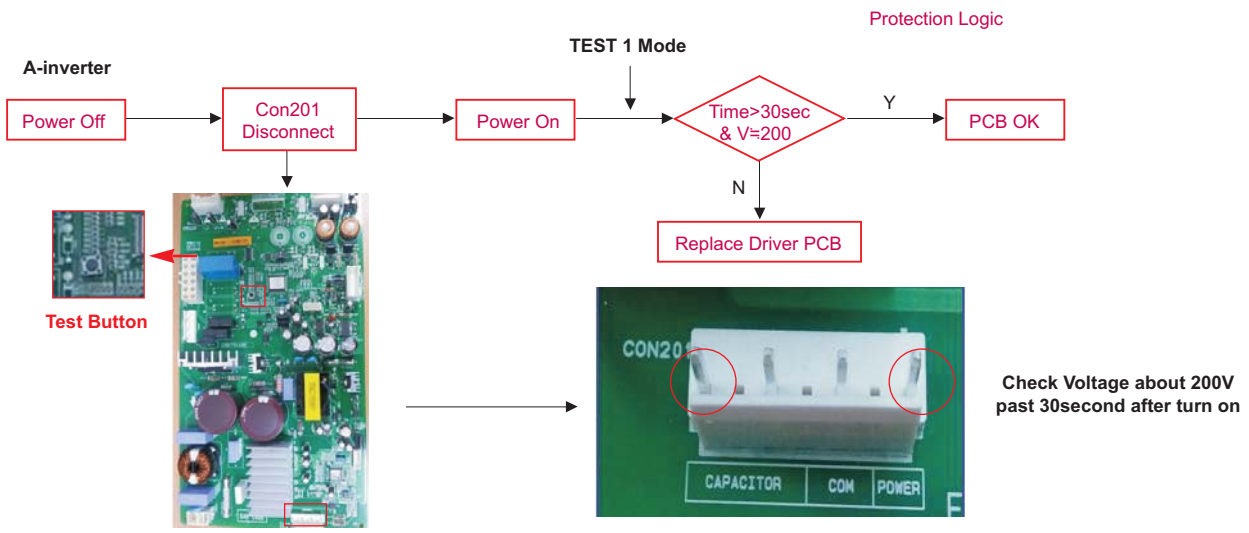

Test Mode

	Ref.	Comp	Display & sound	Refer
		FC75(A-Inverter)		
TEST1	Forced Starting	TDC (Full Stroke)	Display ON, Buzz 1 time	

Troubleshooting

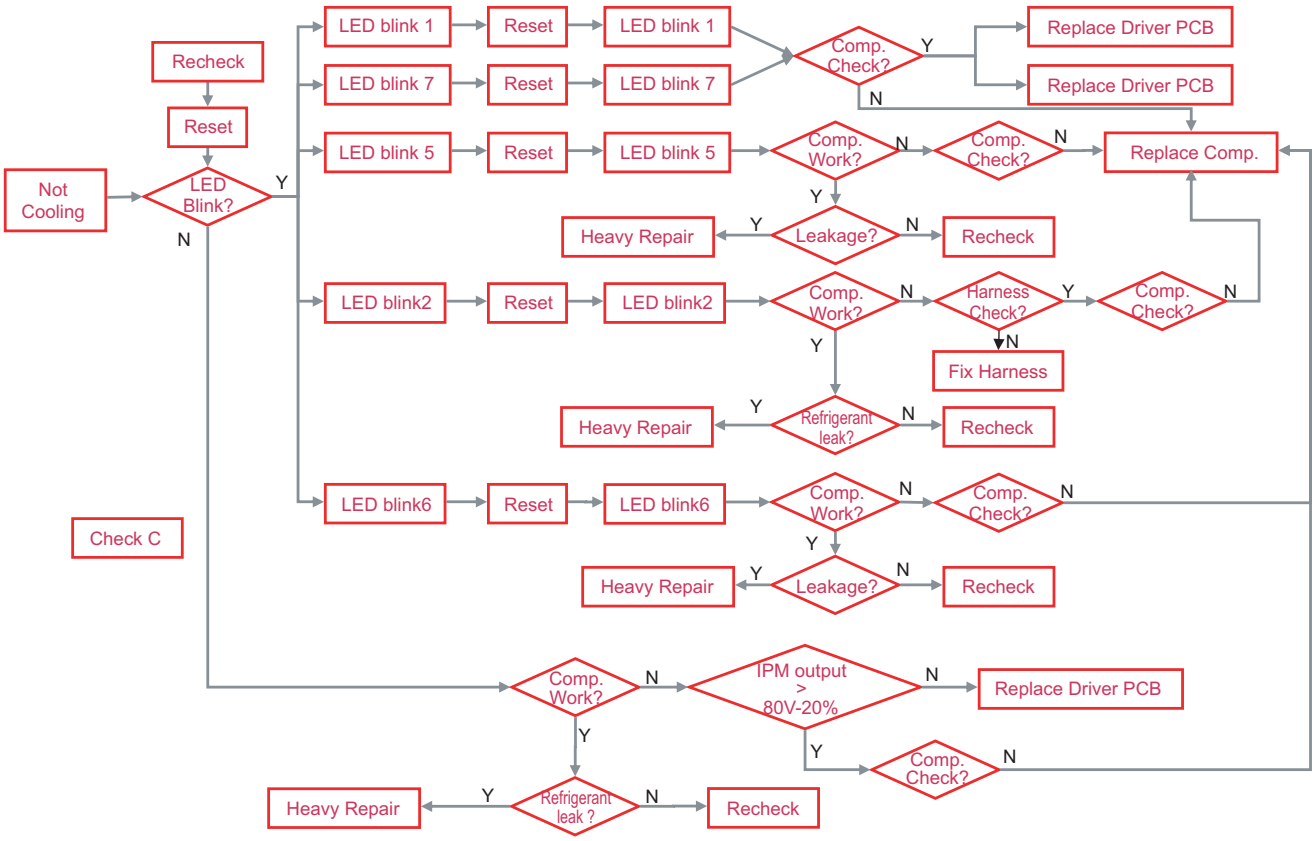

11-1 Check A

- There is PC Board located in the PCB case.
  The control driver is PC board for the compressor.
- This step shows the source voltage of the driver PC board.

Step1. Open PCB Cover

Step2. Check Driver PCB

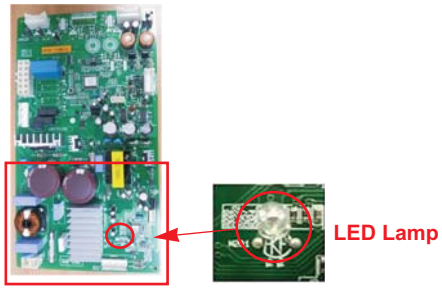

* Driver PCB located in back plate cover
behind the refrigerator.

IPM Output check

- Measure the voltage between the POWER and COMM pins of the connector as shown below.

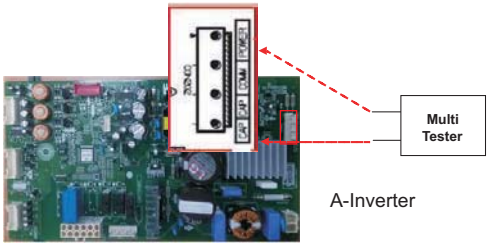

Check to make sure compressor is receiving voltage from IPM

- In order to determine whether the compressor is operating normally, check the output voltage during the refrigeration cycle.
- After initial power-up, when the compressor begins to operate, wait 10 minutes before checking.
- The compressor is operating normally if the voltage is greater than 80V.

11-2 Check B

B1. LED blinks once, then repeats (FCT0 Fault)

Protection Logic

Blink OFF Blink OFF

- Purpose: Detecting motor current and voltage error
- Check voltage at **point A** (Motor Voltage), **point B** (Motor Current) and**Point C** (Capacitor Voltage) when **compressor is off**.
- Spec: **Points A, B, & C 2.5V ± 0.3V**

GND
Voltage

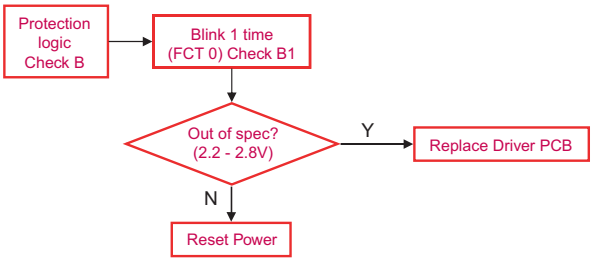

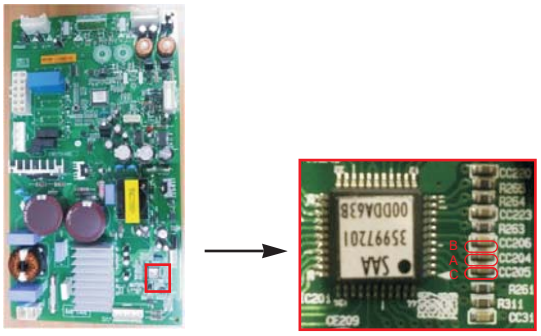

B2. LED blinks two times, then repeats (Stroke Trip)

Protection Logic

Blink Blink OFF Blink Blink OFF

- Purpose: Prevent abnormally long piston strokes.
- Case 1. If compressor doesn't work and LED blinks - Cause: Possibly harness from compressor to PCB might be defective.
- Case 2. If compressor works intermittently and LED blinks - Cause: Condenser Fan or Freezer Fan is not running. Sealed system problem such as moisture restriction, restriction at capillary tube or refrigerant leak.
- Logic: Compressor is forced to off and then tries to restart after 1 minute.

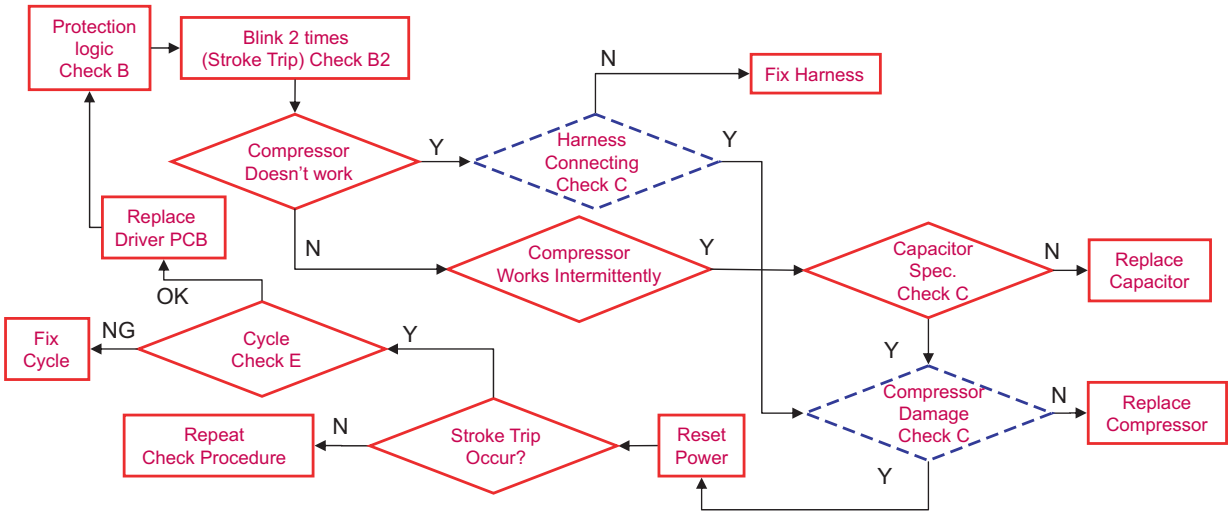

B3. LED blinks five times, then repeats (Locked Piston: A & E Inverters) **Protection Logic**

Blink Blink Blink Blink Blink OFF

- Purpose: To detect locked piston
- Cause: Lack of oil to the cylinder, cylinder or piston damaged and or restricted discharge. A Locked Piston can also be caused by foreign materials inside the compressor.
- Logic: Compressor is forced off and tries to restart within 2.5 minutes.

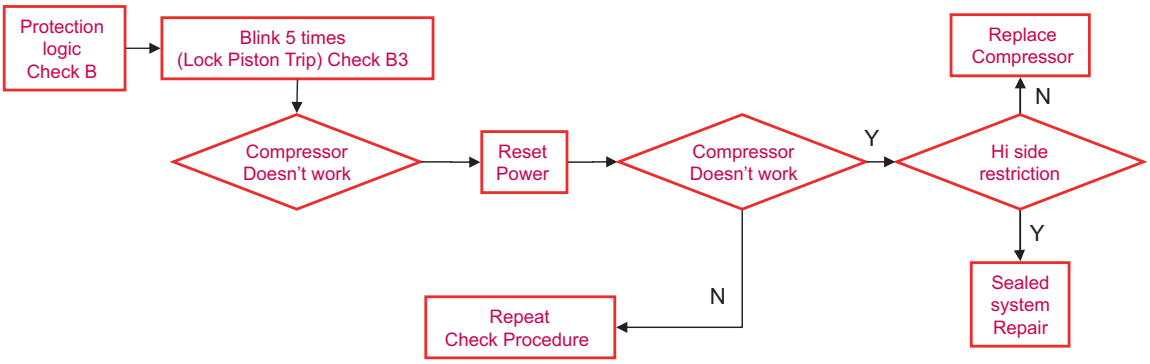

B4. LED blinks six times, then repeats (Current Trip: A & E-Inverters) **Protection Logic**

Blink Blink Blink Blink Blink Blink OFF

- Purpose: Prevent over-current (overload protect)
- Cause: Ambient temperature is high (over 43°C) and/or refrigerator's condenser air movement is restricted.
- Condenser Fan is stopped, restricted discharge line, compressor is damaged, or IPM device is defective.
- Logic: Compressor is forced off and tries to restart after 6 minutes.

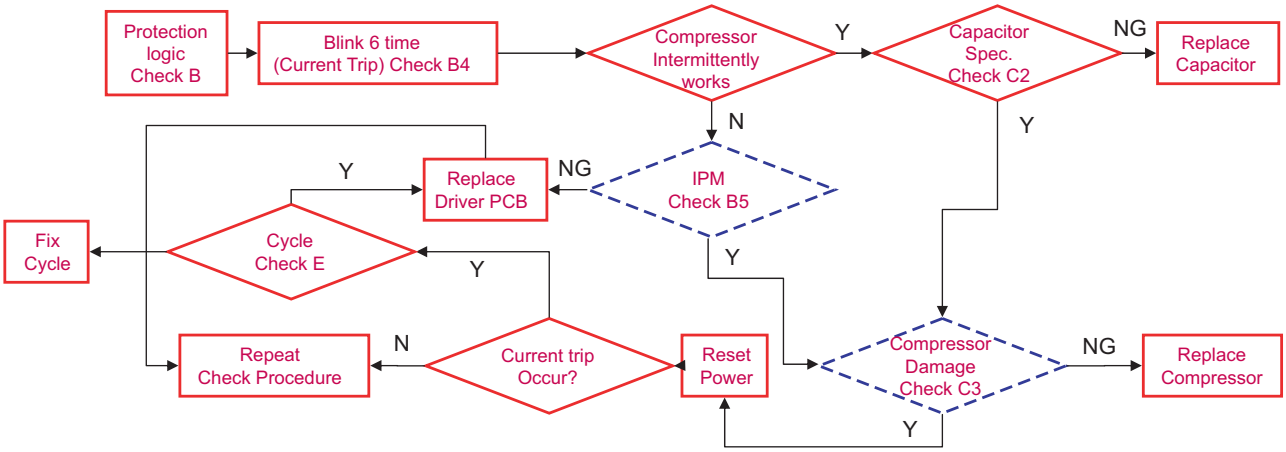

B5. LED blinks seven times, then repeats

Blink Blink Blink Blink Blink Blink Blink OFF

- Purpose: Prevent high current due to IPM Short
- Cause: Damaged IPM (Dead Short)
- Test for a dead short at **Point A** with a VOM.
- Logic: Compressor is forced off and tries to restart in 20 seconds.

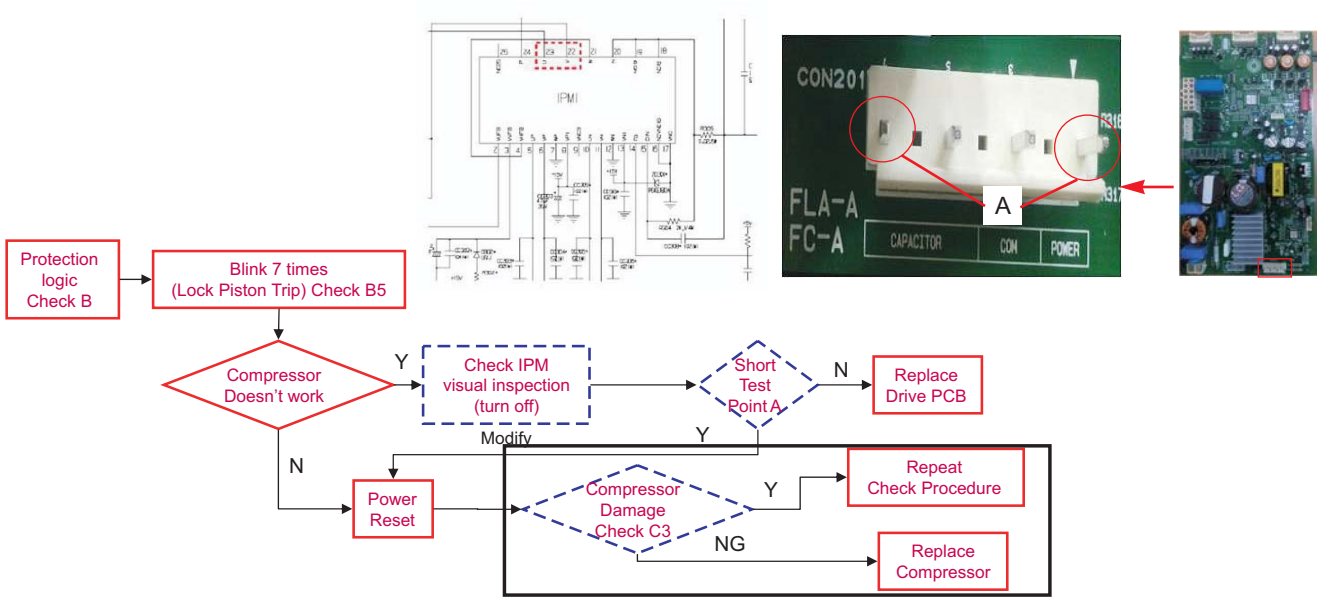

11-3 Check C

C1. Harness Connection Check
C2. Capacitor Specifications
C3. Compressor Check

Check Process

- Step 1. Power off. Step 2. Check capacitor spec. (table1). Step3. Check resistance of point A
  Step 4. Check wire harness (INF ohm). Step 5. Check resistance at point B. Step 6. Point D.

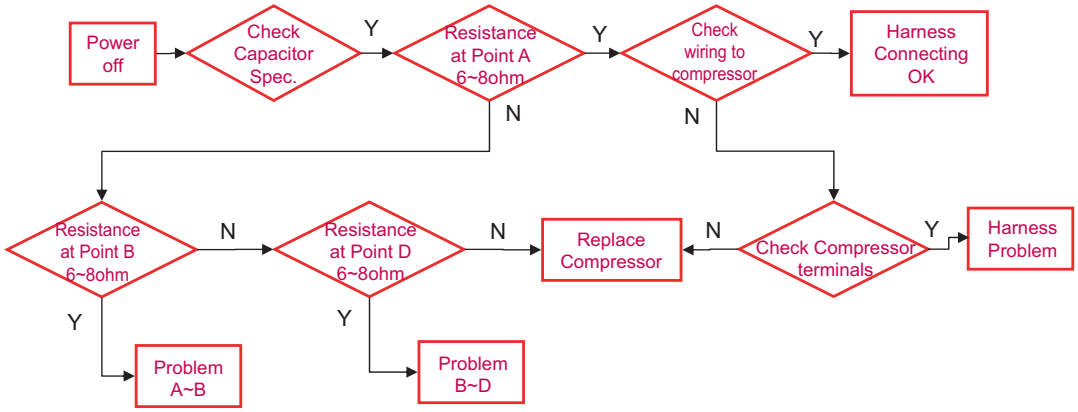

Caution : Turn off power during check C

- Measure the resistance at each point except point C
- Dead short check: measure the resistance between power line in compressor and earth ground in refrigerator (Inf. Ohm)

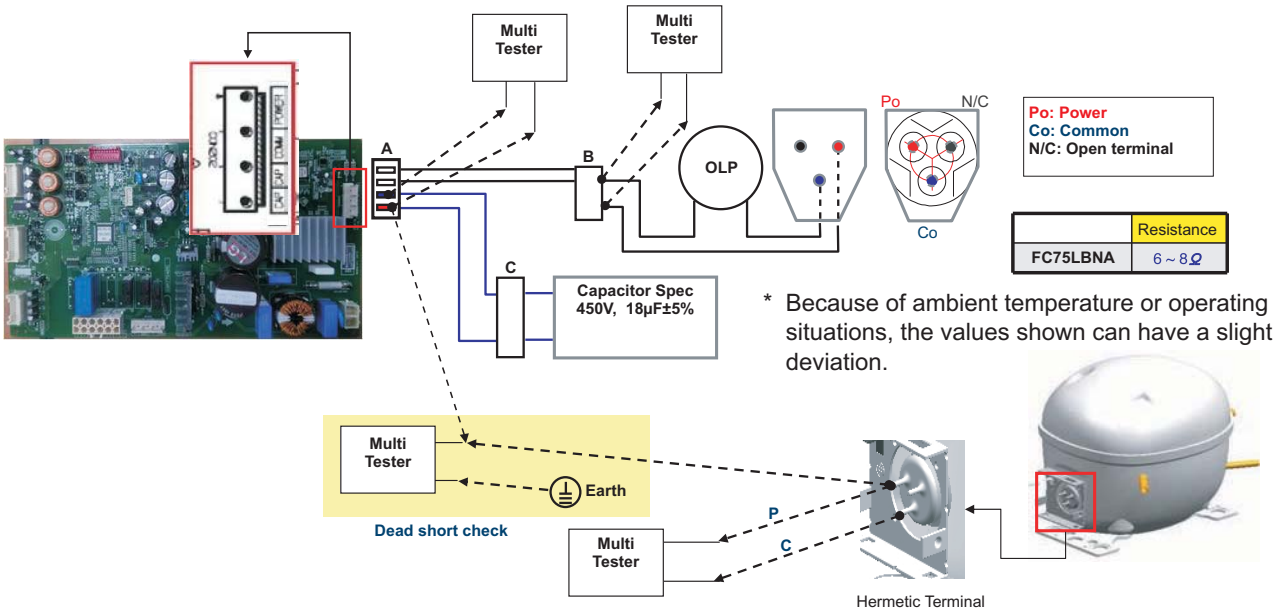

	Resistance
FC75LBNA	6 ~ 8Ω

* Because of ambient temperature or operating situations, the values shown can have a slight deviation.

11-4 Check D

D1. Activate Protection logic

Cycle check with protection logic

- We have to check Condenser fan and Freezer fan before performing Check D
- Locked Piston, Current trip and stroke trip can be activated by other problems then the driver or compressor.

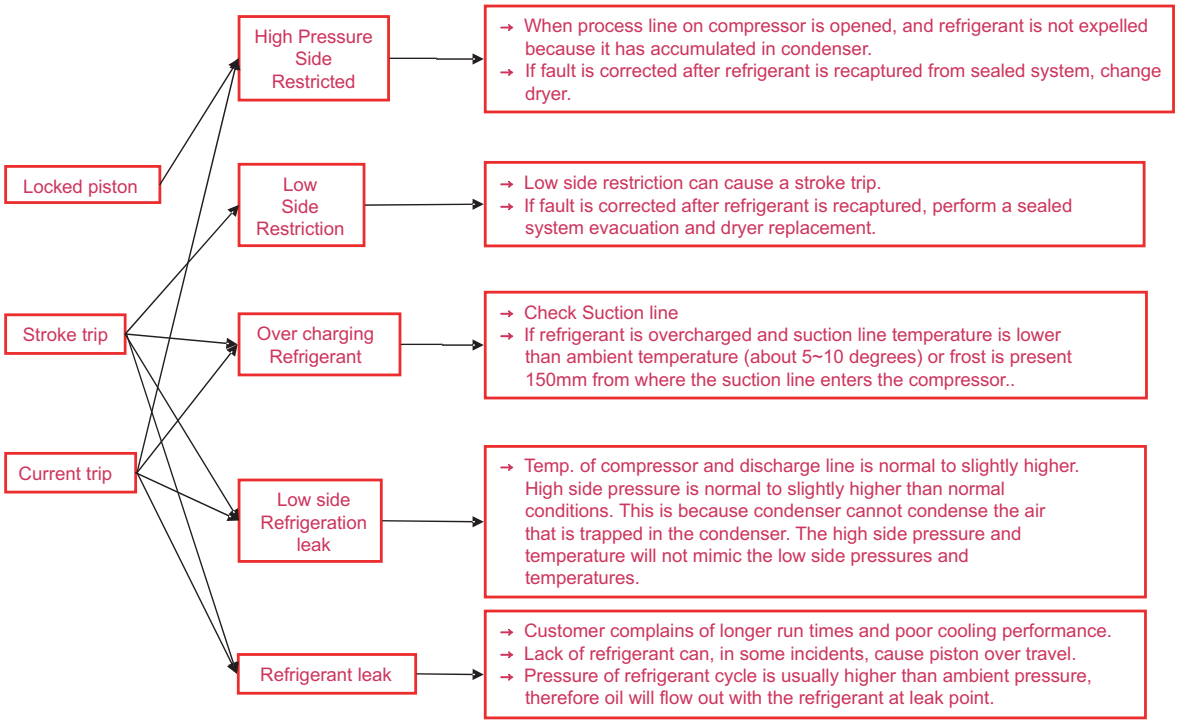

D2. sealed system diagnosis

Sealed system

- Check as follows;

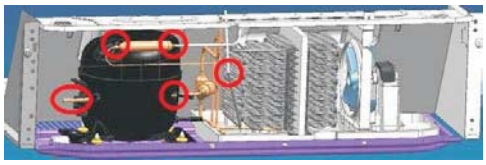

Welding point
1. Comp process stub,
2. Comp discharge
3. Hot Line inlet
4. Drier inlet
5. Drier outlet
6. Evaporator inlet
7. Evaporator outlet
8. suction pipe

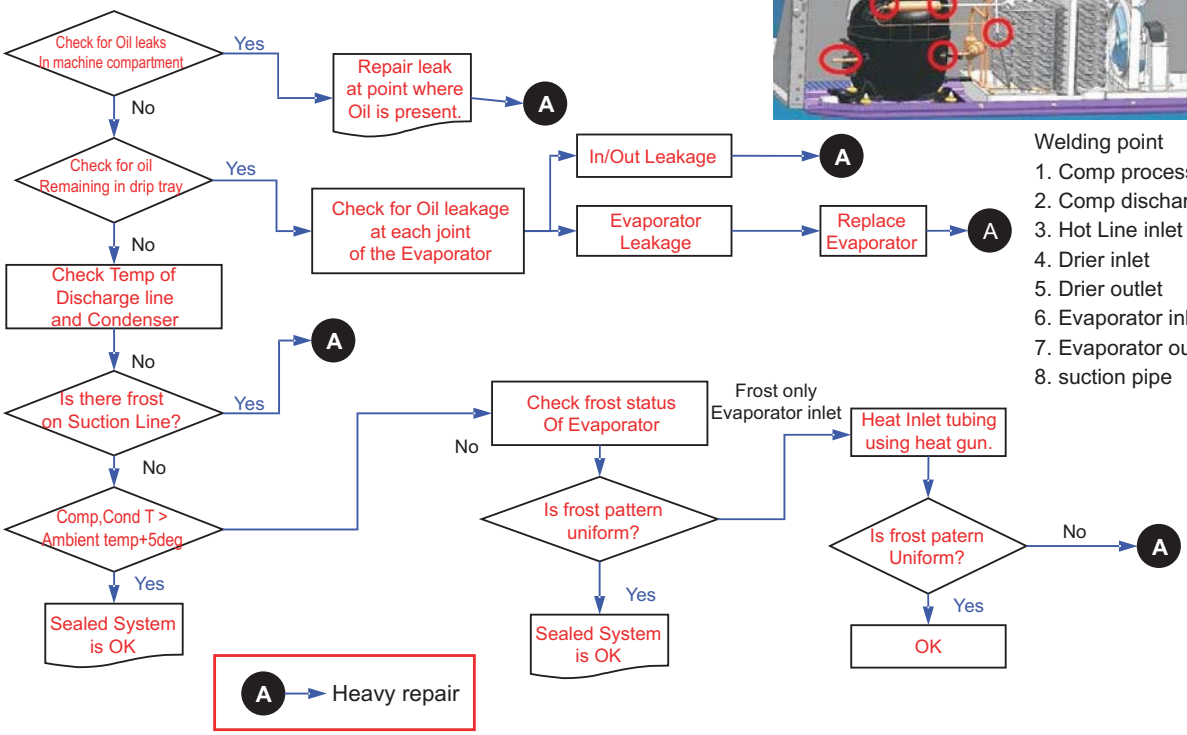

Compressor Troubleshooting

⚠ WARNING HIGH VOLTAGE

Step 1) Open PCB cover

Step 2) Check for blinking frequency of LED and PCB

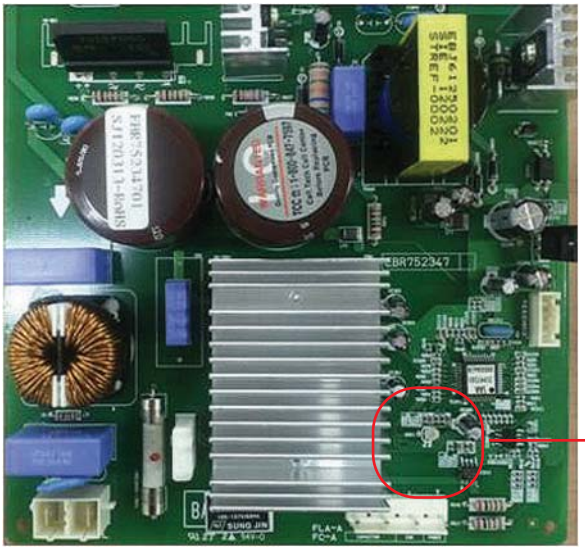

LED Lamp

When compressor is normal, it does not blink

: Refer to the next page to find out what actions to take according to how many times LED blink

No	LED operating condition	Cause	Service guideline
1	**LED two - time repetiton (Stroke Trip)** ··on - on - off - on - on - off - on - on - off ··repeating	PCB Parts defect or Compress or Connector miss connecting (Piston over run)	1. Please check, Whether connector of compressor is attached rightly or not. after power off 2. After the first action, You check on normal operation of compressor. 3. If the same symptom arises after the second action, replace PCB
2	**LED five - time repetiton (Piston Lock Trip)** ··on - on - on - on - on - off - on - on - on - on - on - off ··repeating	Piston constraint	1. After resetting power, check if it is running normal 2. If the same symptom arises after the first action 3. If the same symptom arises after the second action, replace compressor
	LED six - time repetiton (Current Trip) 3 ··on - on - on - on - on - on - off - on - on - on - on - on - on - off ··repeating	Circuit over current error Or cycle error	1. After resetting power, check if it is running normal 2. If the same symptom arises after the first action 3. If the same symptom arises after the second action, replace compressor
	LED seven- time repetiton (IPM Fault Trip) 4 ··on - on - on - on - on - on - on - off - on - on - on - on - on - on - off··repeating	PCB parts defect (IPM)	1. After resetting power, check if it is running normal 2. If the same symptom arises after the first action, replace PCB

11-5 SERVICE DIAGNOSIS CHART

COMPLAINT	POINTS TO BE CHECKED	REMEDY
No Cooling.	• Is the power cord unplugged from the outlet? • Check if the power switch is set to OFF. • Check if the fuse of the power switch is shorted. • Measure the voltage of the power outlet.	• Plug into the outlet. • Set the switch to ON. • Replace the fuse. • If the voltage is low, correct the wiring.
Cools poorly.	• Check if the unit is placed too close to the wall. • Check if the unit is placed too close to the stove, gas cooker, or in direct sunlight. • Is the ambient temperature too high or the room door closed? • Check if food put in the refrigerator is hot. • Did you open the door of the unit too often or check if the door is sealed properly? • Check if the Control is set to **Warm position**.	• Place the unit about 4 inches (10 cm) from the wall. • Place the unit away from these heat sources. • Lower the ambient temperature. • Put in foods after they have cooled down. • Don't open the door too often and close it firmly. • Set the control to **Recommended position**.
Food in the Refrigerator is frozen.	• Is food placed in the cooling air outlet? • Check if the control is set to **colder position**. • Is the ambient temperature below 41°F(5°C)?	• Place foods in the high-temperature section. (front part) • Set the control to **Recommended position**. • Set the control to **Warm position**.
Condensation or ice forms inside the unit.	• Is liquid food sealed? • Check if food put in the refrigerator is hot. • Did you open the door of the unit too often or check if the door is sealed properly?	• Seal liquid foods with wrap. • Put in foods after they have cooled down. • Don't open the door too often and close it firmly.
Condensation forms in the Exterior Case.	• Check if the ambient temperature and humidity of the surrounding air are high. • Is there a gap in the door gasket?	• Wipe moisture with a dry cloth. It will disappear in low temperature and humidity. • Fill up the gap.
There is abnormal noise.	• Is the unit positioned in a firm and even place? • Are any unnecessary objects placed in the back side of the unit? • Check if the Drip Tray is not firmly fixed. • Check if the cover of the compressor enclosure in the lower front side is taken out.	• Adjust the Leveling Screw, and position the refrigerator in a firm place. • Remove the objects. • Fix the Drip Tray firmly in the original position. • Place the cover in its original position.
Door does not close well.	• Check if the door gasket is dirty with an item like juice. • Is the refrigerator level? • Is there too much food in the refrigerator?	• Clean the door gasket. • Position in a firm place and level the Leveling Screw. • Make sure food stored in shelves does not prevent the door from closing.
Ice and foods smell unpleasant.	• Check if the inside of the unit is dirty. • Are foods with a strong odor unwrapped? • The unit smells of plastic.	• Clean the inside of the unit. • Wrap foods that have a strong odor. • New products smell of plastic, but this will go away after 1-2 weeks.

• Other possible problems:

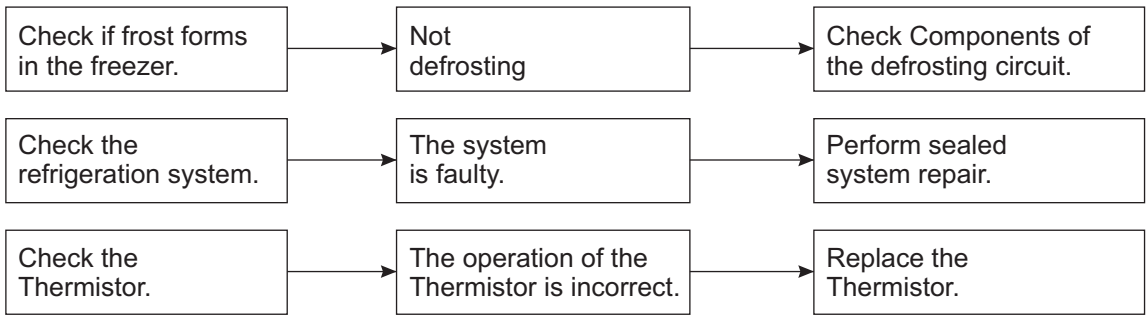

11-6 REFRIGERATION CYCLE

▼ Troubleshooting Chart

CAUSE		STATE OF THE UNIT	STATE OF THE EVAPORATOR	TEMPERATURE OF THE COMPRESSOR	REMARKS
LEAKAGE	PARTIAL LEAKAGE	Freezer compartment and Refrigerator don't cool normally.	Low flowing sound of Refrigerant is heard and frost forms in Evaporator inlet only.	A little higher than ambient temperature.	• Refrigerant level is low due to a leak. • Normal cooling is possible by restoring the normal amount of refrigerant and repairing the leak.
	COMPLETE LEAKAGE	Freezer compartment and Refrigerator don't cool normally.	Flowing sound of refrigerant is not heard and frost isn't formed.	Equal to ambient temperature.	• No discharging of Refrigerant. • Normal cooling is possible by restoring the normal amount of refrigerant and repairing the leak.
RESTRICTION	PARTIAL CLOG	Freezer compartment and Refrigerator don't cool normally.	Flowing sound of refrigerant is heard and frost forms in Evaporator inlet only.	A little higher than ambient temperature.	• Normal discharging of the refrigerant. • The capillary tube is faulty.
	WHOLE CLOG	Freezer compartment and Refrigerator don't cool.	Flowing sound of refrigerant is not heard and frost isn't formed.	Equal to ambient temperature.	• Normal discharging of the Refrigerant.
MOISTURE CLOG		Cooling operation stops periodically.	Flowing sound of refrigerant is not heard and frost melts.	Lower than ambient temperature.	• Cooling operation restarts when heating the inlet of the capillary tube.
DEFECTIVE COMPRESSION	COMP-RESSION	Freezer and Refrigerator don't cool.	Low flowing sound of refrigerant is heard and frost forms in Evaporator inlet only.	A little higher than ambient temperature.	• Low pressure at high side of compressor due to low refrigerant level.
	NO COMP-RESSION	No compressing operation.	Flowing sound of refrigerant is not heard and there is no frost.	Equal to ambient temperature.	• No pressure in the high pressure part of the compressor.

12-6-1 Cleaning

There is no need for routine condenser cleaning in normal Home operating environments. If the environment is particularly greasy or dusty, or there is significant pet traffic in the home, the condenser should be cleaned every 2 to 3 months to ensure maximum efficiency.

If you need to clean the condenser:

- Remove the mechanical cover.
- Use a vacuum cleaner with a soft brush to clean the grille, the open areas behind the grille and the front surface area of the condenser.
- Replace the mechanical cover.

11-6-2 SEALED SYSTEM DIAGNOSIS

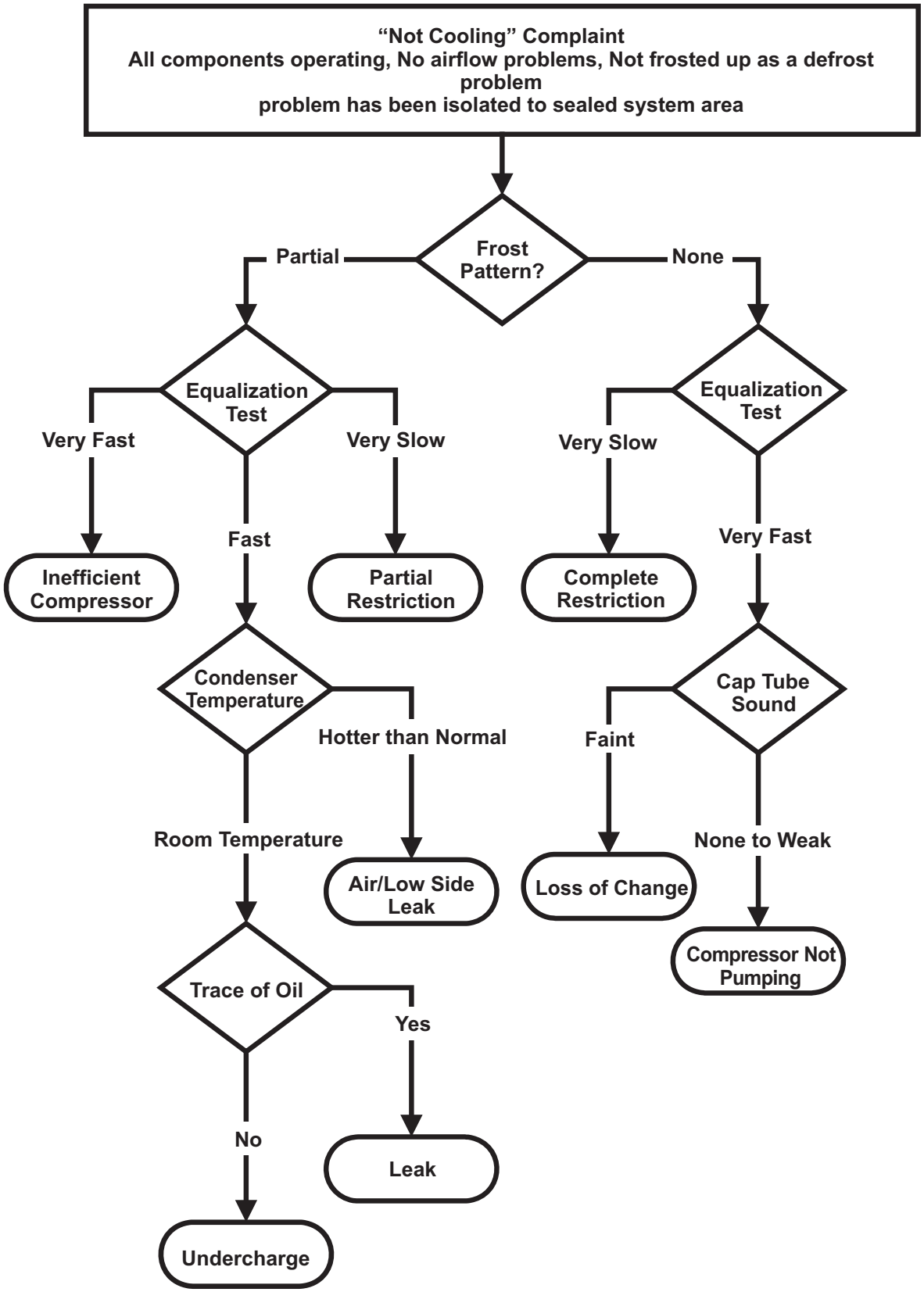

(The equalization test is trying to restart a compressor using a start kit after it has been operating.)

12. ICE MAKER AND DISPENSER

ICE MAKER AND DISPENSER WORKING PRINCIPLES AND REPAIR

12-1 Operation Principle

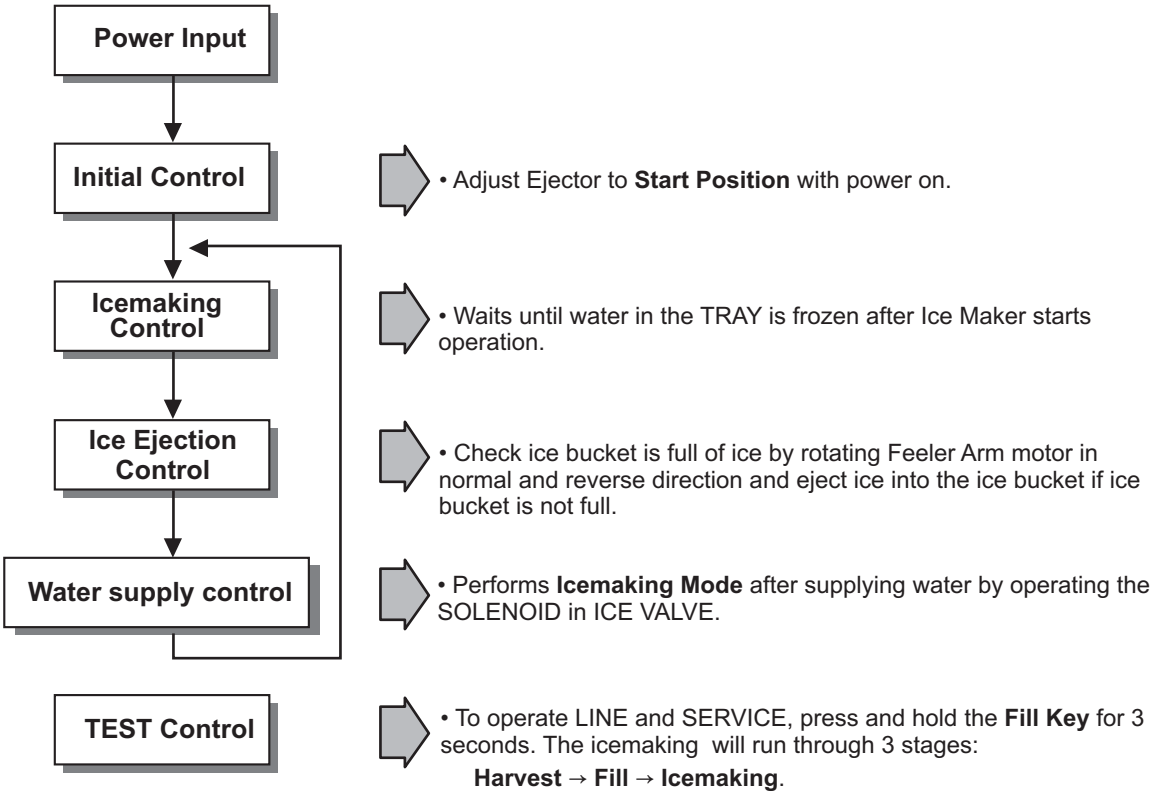

1. Turning the Icemaker stop switch off (O) stops the Icemaking function.
2. Setting the Icemaker switch to OFF and then turning it back on will reset the Icemaker control.

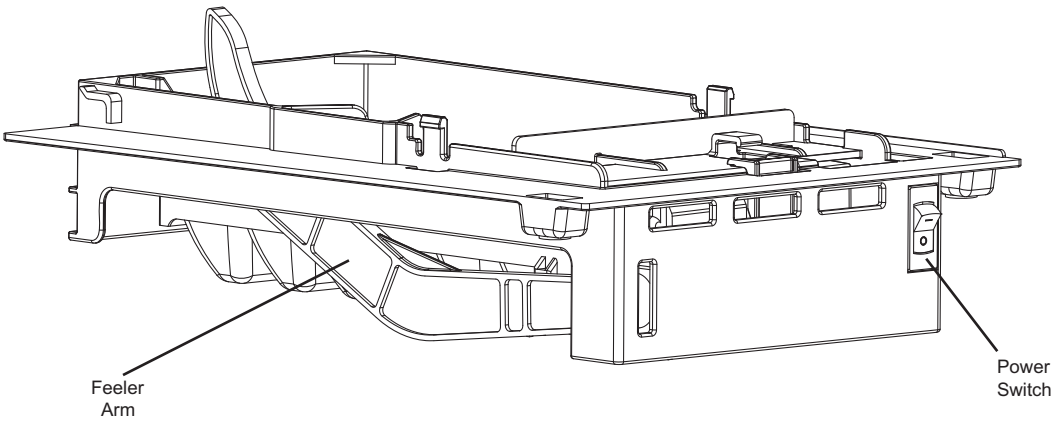

12-2 Icemaker functions

12-2-1 Start Position

1) When power is initially applied or reapplied after power is cut, it detects feeler arm of the TRAY after completion of MICOM initialization. The detecting feeler arm moves up and down.

2) The feeler arm of icemaker tray is judged by output signal, high and low signal, of HALL SENSOR. Make the tray to horizontal by rotating ice ejection motor in normal or reverse direction so that High/Low signal can be applied to MICOM Pin (P22).

3) If there is no change in signals one minute after the geared motor starts to operate, it stops icemaker operation and check the signal every hour. It resets initialization of icemaker when it becomes normal. Ice ejection conducts for 1 cycle.

12-2-2 Icemaking Mode

a) Ice making control is carried out from the completion of water supply to the completion of ice making in the TRAY. Ice making sensor detects the temperature of TRAY and completes ice making.(Ice making sensor is fixed below the TRAY.)

b) Ice making control starts after completion of water supply control or initial control.
Under the ice making control, the F room temperature should be operated with the NOTCH of “Normal/Strong”.

c) It is judged that ice making is completed when ice making sensor temperature reaches at -8℃ after 70 minutes + 10 minutes when water is supplied to the TRAY.

12-2-3 Ice Ejection Mode

a) This is to eject ice from the TRAY after ice making is completed.

b) If HALL SENSOR signal is on within 3.6 seconds after ice ejection motor rotates in normal direction, it does not proceed ice ejection but waits. If the ice bank is full, ice ejection motor rotates in normal direction in every hour to check the condition of ice bank. If the ice bank is not full, the water supply control starts after completion of ice ejection control. If the ice bank is full, ice ejection motor rotates in reverse direction and stops under ice making or waiting conditions.

c) If ice bank is not full, ice ejection starts. The TRAY tilts to the maximum and ice is separated from the TRAY and ice checking lever raises.

d) Ice ejection motor stops for 1 second if HALL SENSOR signal changes from OFF (low) to ON (high) after 3.6 seconds when ice ejection motor rotates in normal direction. If there is no change in Hall IC signals within 1 minute after ice ejection motor operates, ice ejection motor stops as ice ejection motor or hall IC is out of order.

e) If ice ejection motor or Hall IC is abnormal, ice ejection motor rotates in normal direction to exercise initial operation in every hour. It resets the ice maker if ice ejection motor or Hall IC is normal.

f) The TRAY stops for 1 second at maximum tilted conditions.

g) The TRAY returns to horizontal conditions as ice ejection motor rotates in reverse direction.

h) When the TRAY becomes horizontal , the cycle starts to repeat.
Water Supply – Ice making – Ice ejection – TRAY returns to Horizontal.

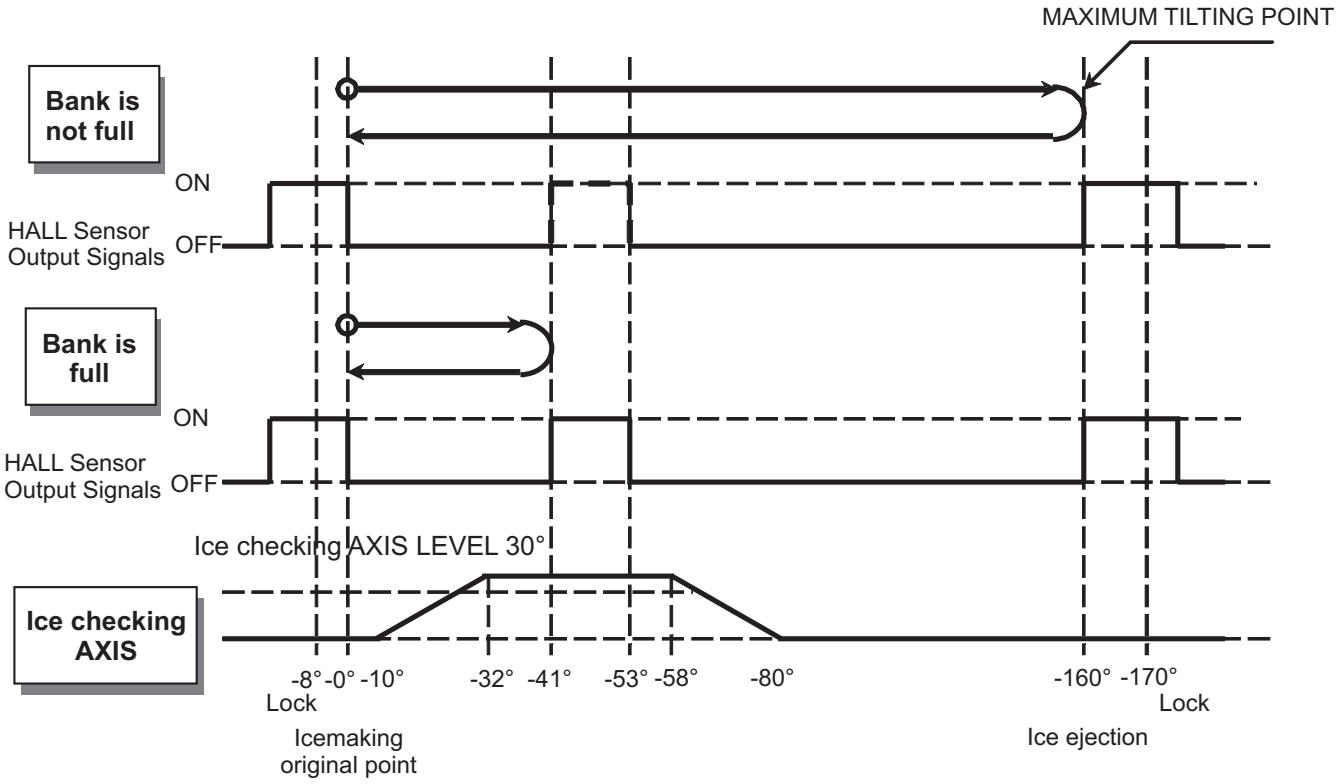
MAXIMUM TILTING POINT
Bank is not full
ON
HALL Sensor Output Signals
OFF
Bank is full
ON
HALL Sensor Output Signals
OFF
Ice checking AXIS LEVEL 30°
Ice checking AXIS
-8° -0° -10°
Lock
Icemaking original point
-32° -41° -53° -58° -80°
-160° -170°
Lock
Ice ejection

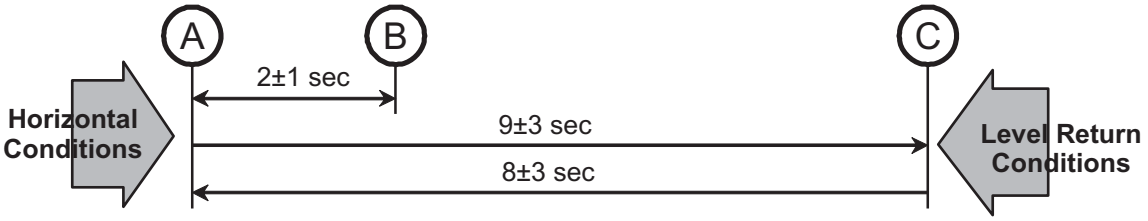
A
B
C
2±1 sec
Horizontal Conditions
9±3 sec
8±3 sec
Level Return Conditions

12-2-4 Test Icemaker Mode

Test function starts when test switch is pressed for more than **3 seconds**. User shouldn't force operation while doing test mode, service or cleaning.

Test switch will work only when ice tray its in horizontal position, not during ice ejection or water supplying.

When pressing the Test Switch, feeler arm will sense and then ice tray will start ice ejection, after twisting, ice tray returns to initial position. When returning to horizontal position, water supply will start filling the ice tray. After this, test mode its done.

Test mode cycle elapsed time of 30 seconds its shown as the next sequence:
Feeler arm sensing – Ice ejecting – Ice tray returns to horizontal position – Water supply.

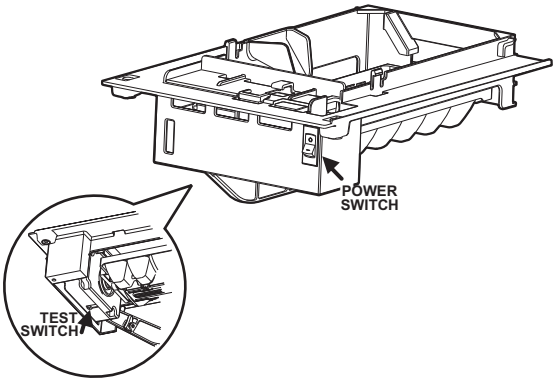

12-2-5 Water Supply Function

This function is for supply water to tray, by the mechanic water valve, when ice ejecting finish and tray return to initial position.

Water supply quantity depend of DIP S/W.

Water Supply Time Table

No	DISP S/W		Water Supply Time	Note
	S1	S2		
1	OFF	OFF	9.0	DIP S/W Setting will be depend of water pressure * DIP switch is on the main PCB.
2	ON	OFF	8.0	
3	OFF	ON	10.0	
4	ON	ON	11.0	

If water supply setting is changed while system is energized, change will be made immediately. But if change occurs when water supply function is working, change will be executed next cycle of icemaker

12-2-6 Ice maker stop switch

- Ice Maker Stop S/W ON state, Ice Maker normal operation
- Ice Maker Stop S/W OFF state: Ice Maker do not operate

13. DESCRIPTION OF FUNCTION & CIRCUIT OF MICOM

13-1 FUNCTION

13-1-1 Function

1. When the appliance is plugged in, it defaults to 37°F for the refrigerator and 0°F for the freezer.
   You can adjust the refrigerator and the freezer control temperature by pressing the ADJUST button.
2. When the power is initially applied or restored after a power failure, it is automatically set to 3 & -18.

Control range : 33°F ~ 46°F
1°C ~ 8°C

Control range : -6°F ~ 8°F
-21°C ~ -13°C

13-1-2 How to Change the Temperature Mode to °F/°C

1. The display temperature mode can be changed from °F to °C or °C to °F by pressing and holding the FRZ TEMP and the REF TEMP keys at the same time for over five seconds.

13-1-3 ICE PLUS

1. The purpose of this function is to intensify the cooling speed of freezer and to increase the amount of ice.
2. Whenever selection switch is pressed, selection/release, the icon will turn ON or OFF.
3. If there is a power outage and the refrigerator is powered on again, **ICE PLUS** will be canceled.
4. To activate this function you need to press the **ICE PLUS** key and the icon will turn ON. This function will remain activated for 24 hours.

13-1-4 How to set the display mode and cancel it

1. Keep pressing the refrigerator temp button and the Ice Plus button for 5 seconds at the same time with opening the refrigerator door.
2. It goes to display mode with special indication as below figure.
3. All freezing unit will be turned off at display mode(Exceptions : Lamp, Display).
4. To reset to normal operation, press and hold the Refrigerator Temp and the Ice Plus button for 5 seconds.

13-1-5 REFRIGERATOR LAMP AUTO OFF

1. To protect the risk of lamp heat, when the refrigerator door is opened for 7 minutes, the refrigerator lamp will be turned off automatically.

13-1-6 Alarm for Open Door

1. This feature sounds a buzzer when the freezer or refrigerator door is not closed within 1 minute after it is opened.
2. One minute after the door is opened, the buzzer sounds three times each for 1/2 second. These tones repeat every 30 seconds.
3. The alarm is cancelled when the freezer or the refrigerator is closed while the buzzer sounds.

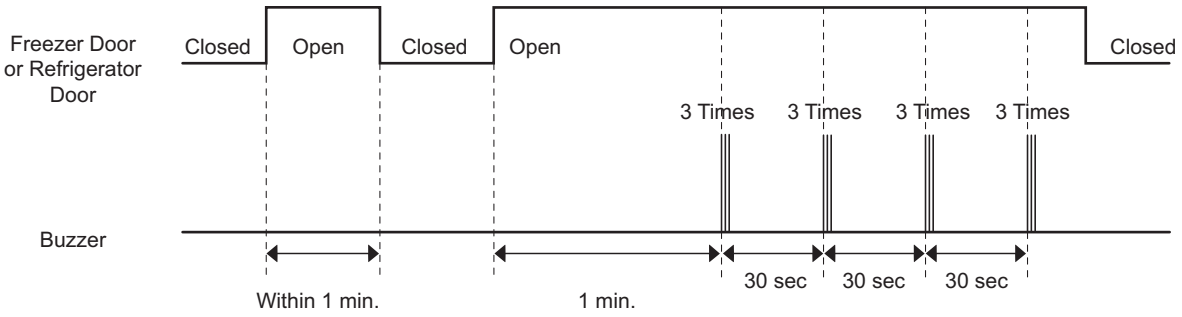

13-1-7 Buzzer Sound

When the button on the front display is pushed, a Ding~ Dong~ sound is produced.

13-1-8 Defrosting (removing frost)

1. Defrosting starts each time the compressor running time reaches between 7~50 hours and 50 hours according to door open time.
2. For initial power on or for restoring power, defrosting starts when the compressor running time reaches 4 hours.
3. Defrosting stops if the sensor temperature reaches 8°C or more. If the sensor doesn't reach 8°C in 1 hours, the defrost mode is malfunctioning.
4. Defrosting won't function if its sensor is defective (wires are cut or short circuited)

13-1-9 Electrical Parts Are Turned On Sequentially

Electrical parts such as compressor, defrosting heater, freezer fan, etc. are turned on in the following order to prevent noise and parts damage. Several parts are started at the same time at initial power on and are turned off together when test is completed.

OPERATING		ORDERS
Initial power in Temperature of defrosting	Temperature of defrosting sensor is 45°C or more (when unit is newly purchased or when moved)	**Power ON** → in 0.5 sec. → **Compressor ON** → in 0.5 sec. → **Freezer fan ON**
	sensor is lower than 45°C (during power outages or for service)	**Power ON** → in 0.5 sec. → **Defrosting heater ON** → in 10 sec. → **Defrosting heater OFF** → in 0.5 sec. → ****Pillar heater ON** → in 5 sec. → **Pillar heater OFF** → in 11 sec. → **Compressor ON** → in 0.5 sec. → **Freezer fan ON**
Reset to normal operation from test mode		**Total load ON** → In 7 min. → **Compressor ON** → In 10 min. → **Freezer fan ON**

**Pillar Heater only apply in 3D/4D Models.

13-1-10 Defect Diagnosis Function

1. Automatic diagnosis makes servicing the refrigerator easy.
2. When a defect occurs, the buttons will not operate.
3. When the defect CODE removes the sign, it returns to normal operation (RESET).
4. The defect CODE shows on the refrigerator and freezer display.

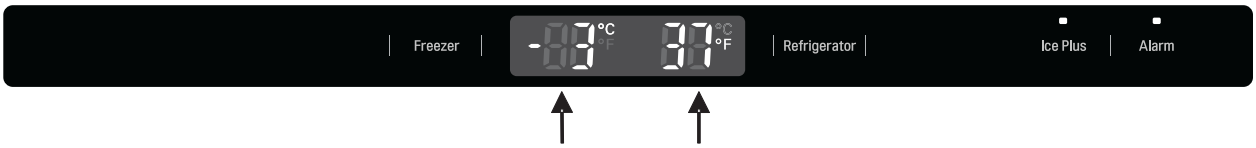

Error Code ① Error Code ②

ERROR CODE on display panel

NO	Error Detection	Error Display		Error Generation Factors	Remark
	Category	Freezer Temperature	Ref Temperature		
1	Normality			None	Normal operation of Display
2	Freezer Sensor Error	FS	E	Short or open in Freezer Sensor circuit	Check each sensor and its connector
3	Refrigerator Sensor Error	rS	E	Short or open in Refrigerator Sensor circuit	
4	Room Temp Sensor Error	rt	E	Short or open in room temperature sensor circuit	
5	Defrosting Sensor Error	dS	E	Short or open in defrost sensor circuit	
6	Icing Sensor Error	IS	E	Short or open in Icing sensor circuit	
7	Poor Defrosting	dH	E	When Defrost sensor does not reach over 8°C within 1 hour, dH E is indicated when error occur more than twice sequentially.	Check FUSE melting, DRAIN Clogging, HEATER running, RELAY failure
8	Error BLDC Motor Operation Freezer Fan	FF	E	It is caused when feedback signal isn't over 65 seconds during BLDC FAN motor operating	Poor motor, hooking to wires of fan, contact of structures to fan, snapping or short circuit of Lead wires
9	Error BLDC Motor Operation Condenser Fan	CF	E	It is caused when feedback signal isn't over 65 seconds during BLDC FAN motor operating	Poor motor, hooking to wires of fan, contact of structures to fan, snapping or short circuit of Lead wires
10	Ice Maker Kit defect	It	E	Other electric system error such as motor, gear , Hall IC, operation circuit within I/M kit	When the ice ejecting does not operated on pressing the I/M TEST S/W

NOTE)Within 3 hours after the error : Press the Ice Plus button and Freezer button simultaneously 3 hours after the error : All error, except for "rt E", "IS E", "It E" error, are displayed. "IS E"which is displayed without input of user is the error of Icing Sensor.

13-1-11 TEST Mode

1. The test mode allows checking the PCB and the function of the product as well as finding out the defective part in case of an error.
2. The test mode is operated by pressing test button at main PCB conttroller.
3. While in the test mode, the function control button is not recognized, but the recognition tone (beep~) sounds.
4. After exiting the test mode, be sure to reset by unplugging and then plugging in the appliance.
5. If an error, such as a sensor failure, is detected while in the test mode, the test mode is cleared and the error code is displayed.
6. While an error code is displayed, the test mode will not be activated.

MODE	MANIPULATION	CONTENTS	REMARKS
TEST1	Push Test S/W(in the main Board) once.	1) Continuous operation of the COMPRESSOR and the FREEZER/ Refrigerator fan. 2) Stepping DAMPER OPEN. 3) Defrosting HEATER OFF. 4) DISPLAYED LED all ON.	
TEST2	Push Test S/W(in the main Board) once in TEST MODE 1.	1) Continuous operation of the COMPRESSOR and the FREEZER/ Refrigerator fan. 2) Stepping DAMPER CLOSE. 3) Defrosting HEATER OFF. 4) DISPLAYED LED shows no.2	
TEST3	Push Test S/W(in the main Board) once in TEST MODE 2.	1) COMPRESSOR and the FREEZER/ Refrigerator fan OFF. 2) Stepping DAMPER CLOSE. 3) Defrosting HEATER ON. 4) DISPLAYED LED shows no.3	Reset if the Temperature of the Defrosting Sensor is 46°F (8°C) or more.
RESET	Push Test S/W(in the main Board) once in TEST MODE 3.	Reset to the prevoiusly setting before TEST MODE.	The compressor will start after a 7-minute delay.

* Freezer Fan Variable RPM Check:

To check the variable rpm, press the Ice Plus button or TEST1 button. The fan speed will change to higher than original setting.

* Demonstration (Display) MODE:

1. To enter this mode, press and hold Refrigerator Temp button and Ice Plus button for 5 seconds.
2. The LED panels will display OFF, to indicate that the compressor, circulating fan, damper, and defrost heater are not operating.
3. The open door alarm and the LED auto-off feature will work normally and can be demonstrated.
4. To reset to normal operation, press and hold Refrigerator Temp button and Ice Plus button for 5 seconds.

14. EXPLODED VIEW

LFC24770**

CASE PARTS

Caution: Use the part number to order part, not the position number.

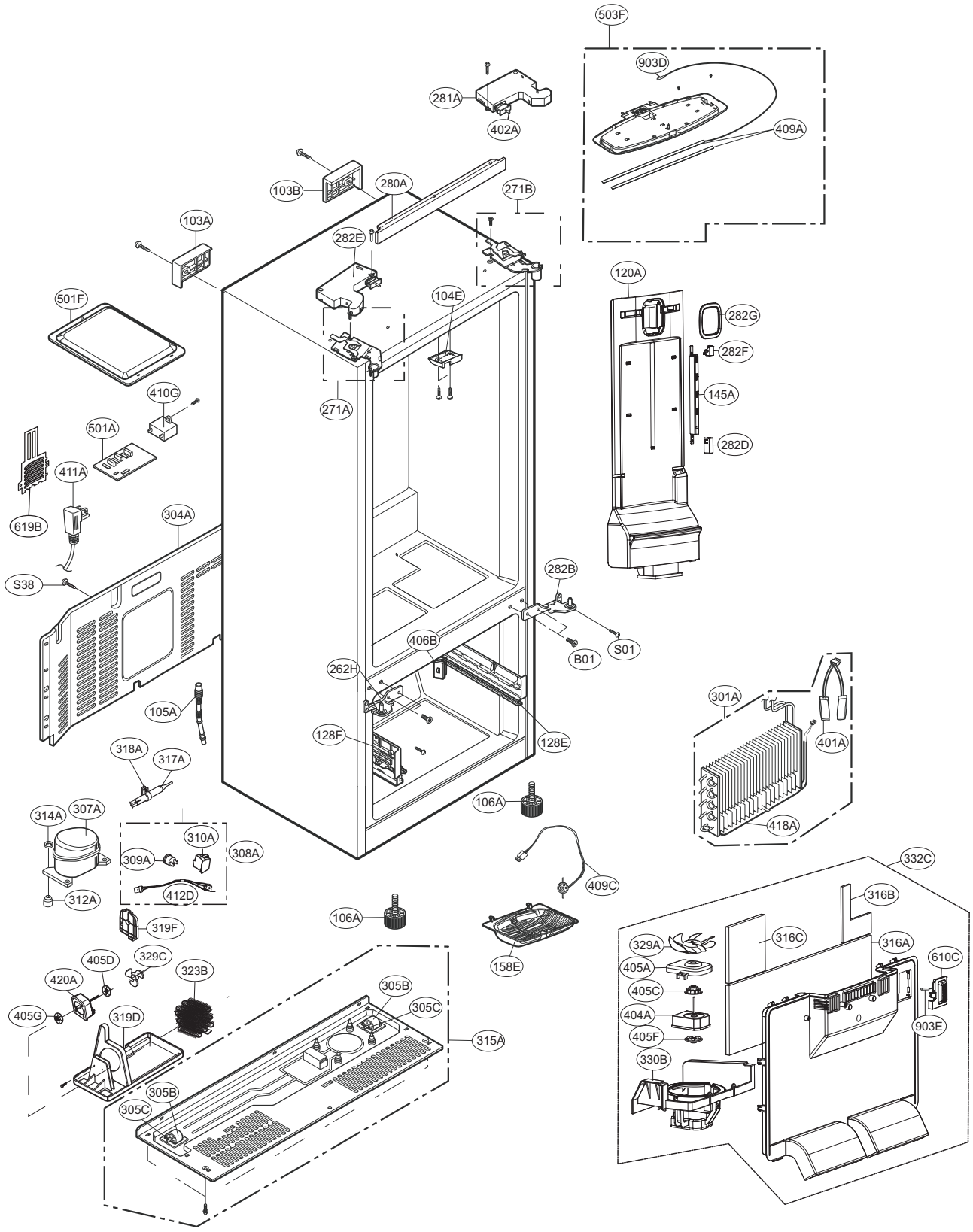

FREEZER PARTS

Caution: Use the part number to order part, not the position number.

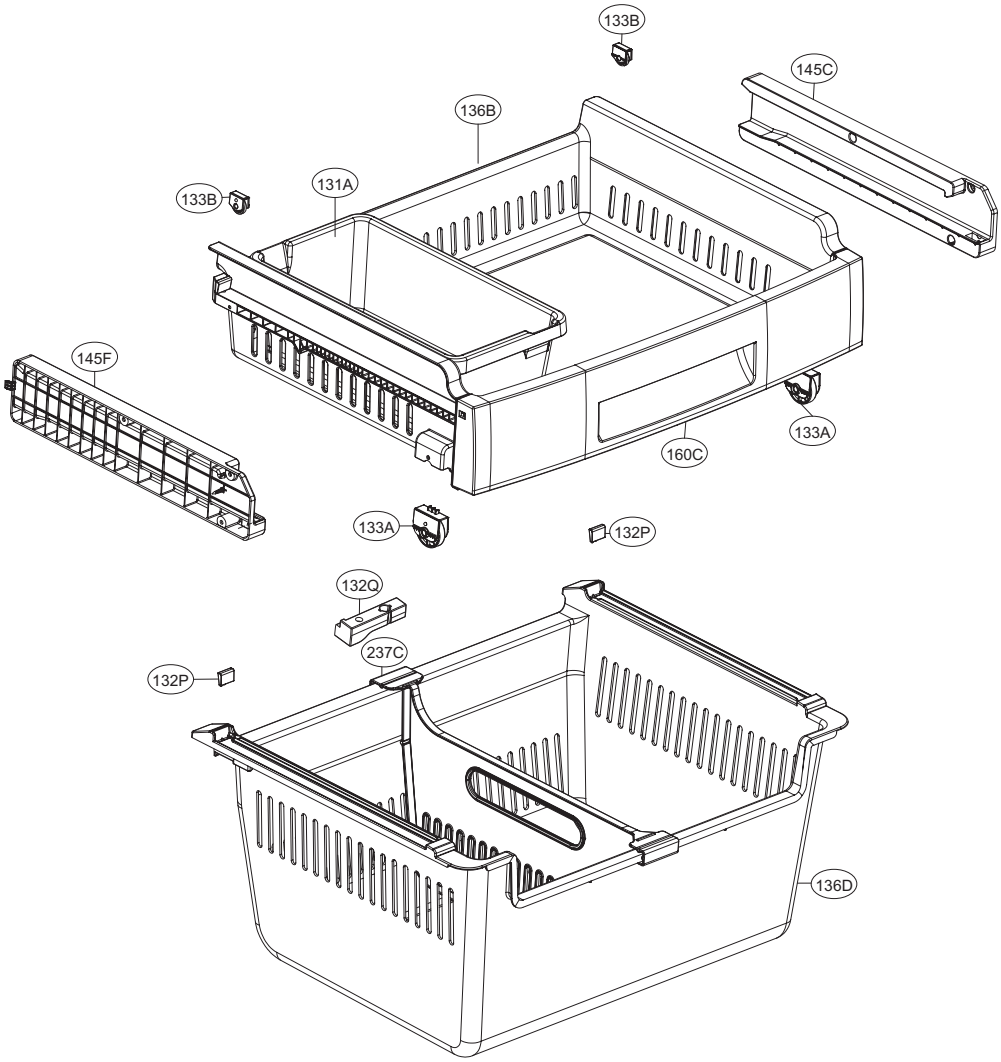

REFRIGERATOR PARTS

Caution: Use the part number to order part, not the position number.

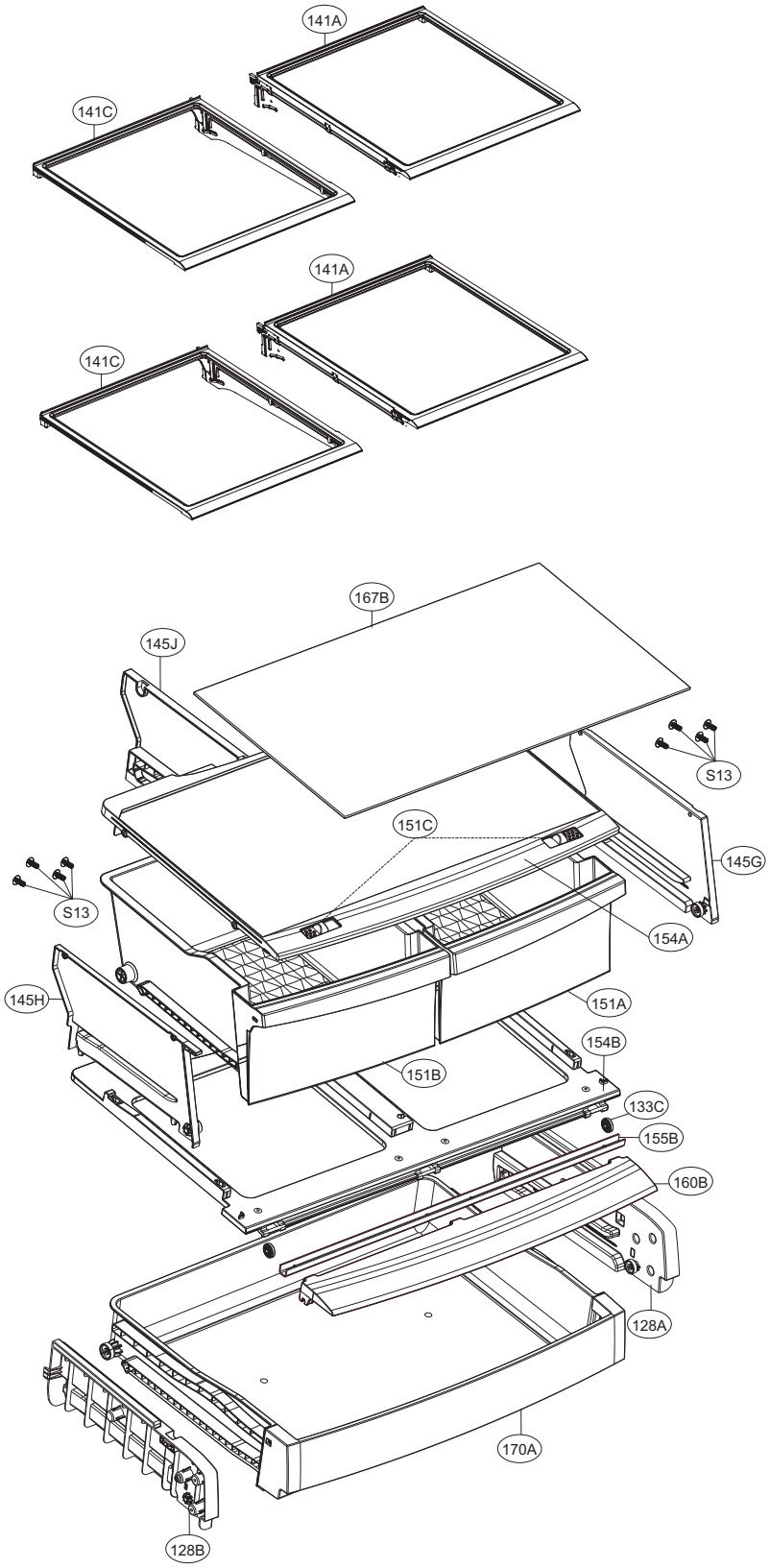

DOOR PARTS

Caution: Use the part number to order part, not the position number.

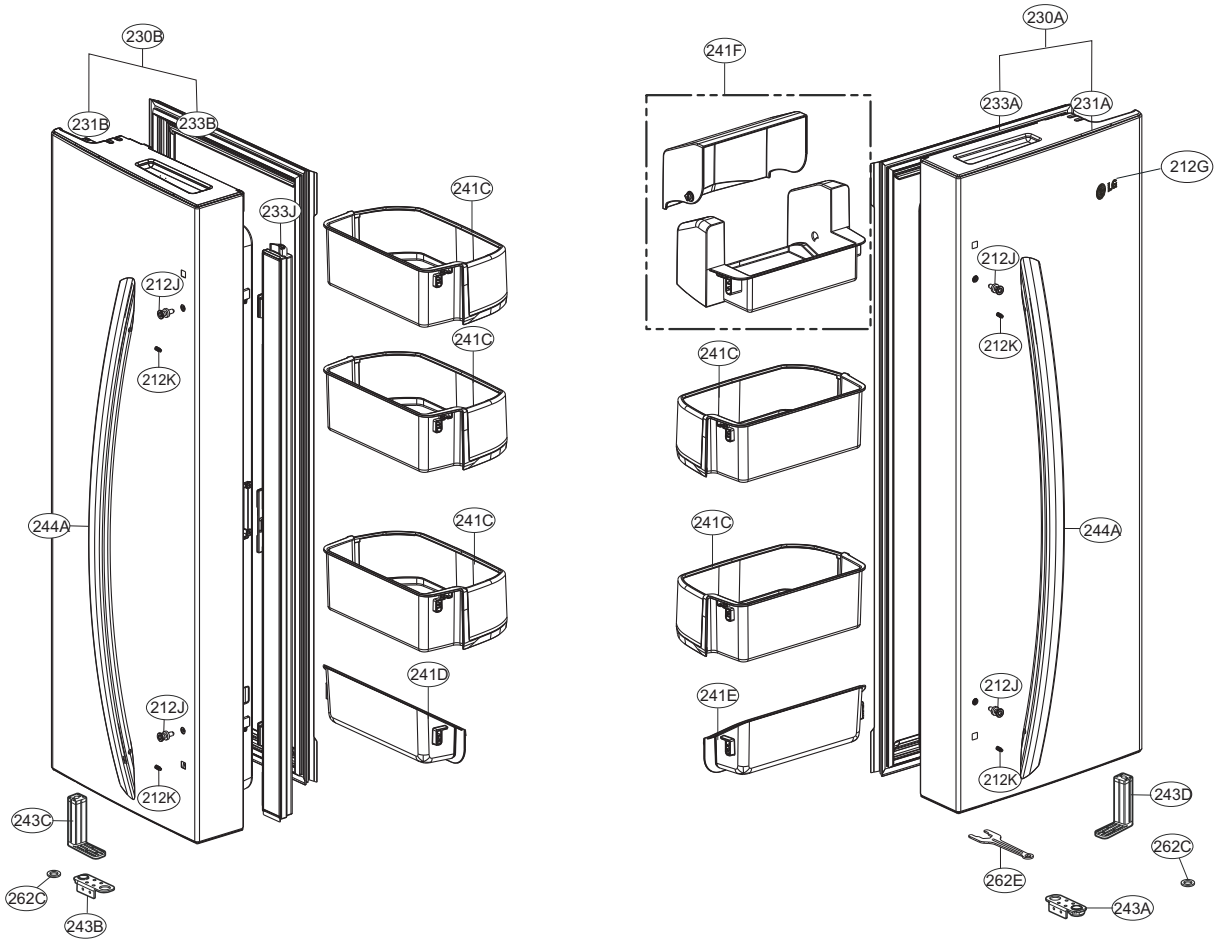

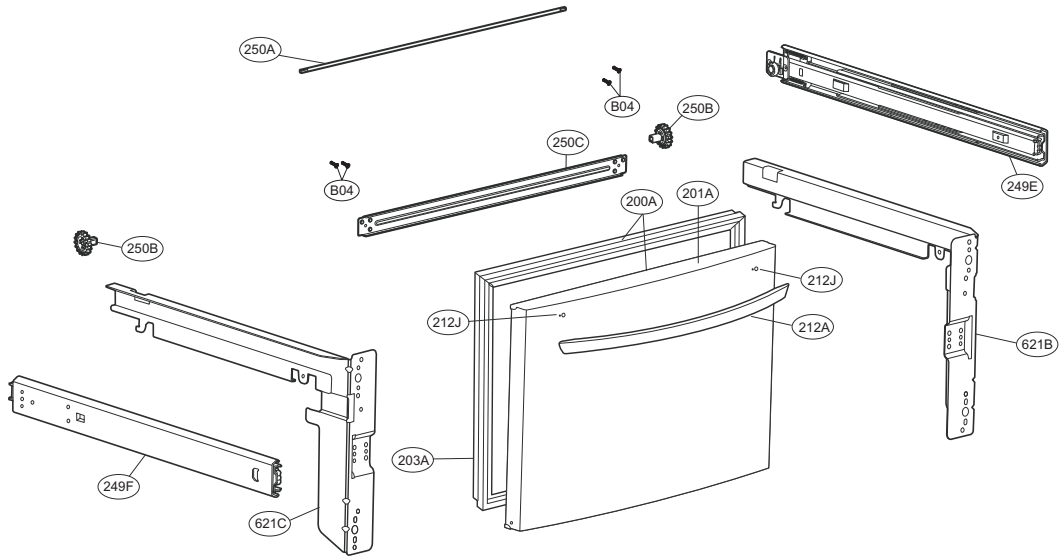

ICEMAKER PARTS

Caution: Use the part number to order part, not the position number.

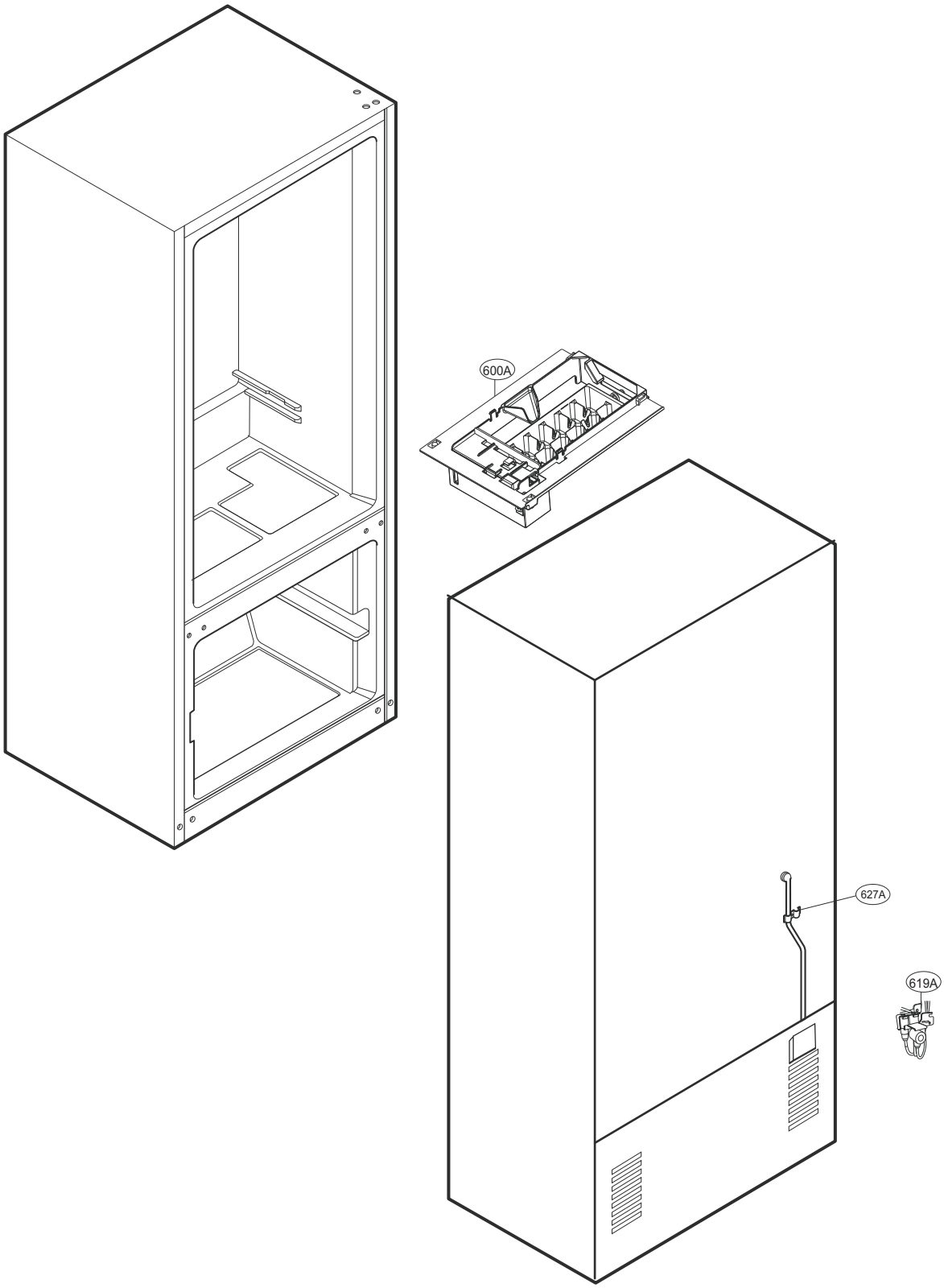

P/No. MFL62526049

August, 2013
Printed in Mexico