ILCE-7CR

SERVICE MA

Ver. 1.0 2024.04

Conditions of Use/Revision o

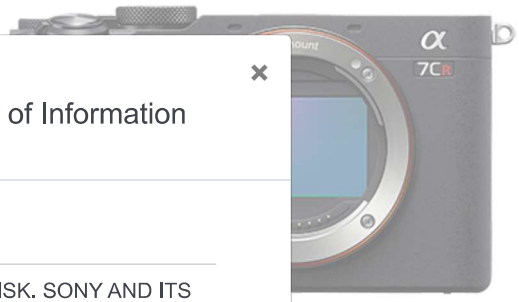

S DIGITAL CAMERA

SERVI

EMBLY

EXPLOD

CHEMATIC
MS

989694811
2024D33-1 © 2024.04

Sony Corporation

Conditions of Use/Revision of Information

Conditions of Use

DISCLAIMER: USE AT OWN RISK. SONY AND ITS AFFILIATES ARE NOT LIABLE FOR ANY DAMAGE OR INJURY CAUSED TO ANY DIGITAL ELECTRONIC EQUIPMENT, PERSON, OR PROPERTY, WHICH OCCURS DUE TO USE OF THE TOOLS, PARTS, DOCUMENTATION, OR OTHER MATERIALS HEREIN PROVIDED, WHETHER FOR REPAIR, DIAGNOSIS, MAINTENANCE, MODIFICATION, OR OTHERWISE, INCLUDING BUT NOT LIMITED TO: ANY INDIRECT, INCIDENTAL, SPECIAL, OR CONSEQUENTIAL DAMAGES; ANY LOSS OF DATA, PRIVACY OR PROFITS; OR ANY INABILITY TO USE, OR REDUCED FUNCTIONALITY OF, THE DIGITAL ELECTRONIC EQUIPMENT. PLEASE READ ALL INSTRUCTIONS IN THIS MANUAL BEFORE PROCEEDING. PLEASE FOLLOW ALL STEPS IN THE ORDER IN WHICH THEY ARE DESCRIBED. IF YOU DO NOT HAVE ALL TOOLS AND PARTS AVAILABLE TO YOU, OR ARE NOT COMFORTABLE PERFORMING THE REPAIRS DESCRIBED HEREIN, DO NOT PROCEED. FAILURE TO FOLLOW THESE INSTRUCTIONS, OR USE THE PROPER TOOLS AND PARTS, MAY DAMAGE YOUR PRODUCT, LEAD TO PERSONAL INJURY OR CAUSE PROPERTY DAMAGE.

Note

Be sure to keep your PC used for service and checking of this unit always updated with the latest version of your anti-virus software.

Revision of Information

This information may be changed or updated at any time without any prior notice. Please confirm that this information is up-to-date before using it.

Close

ILCE-7CR

SERVICE MANUAL

Ver. 1.0 2024.04

Conditions of Use/Revision of Information



INTERCHANGEABLE LENS DIGITAL CAMERA

SERVICE NOTE	DISASSEMBLY	ASSEMBLY
EXPLODED VIEWS	SUPPLIED ACCESSORIES	FRAME SCHEMATIC DIAGRAMS

989694811
2024D33-1 © 2024.04

Sony Corporation

SERVICE NOTE

PLASTIC PARTS

Be careful to the following points for plastic parts used in this unit.

- Use a piece of cleaning paper or cleaning cloth for cleaning plastic parts. Avoid using chemicals.
  Even if you have to use chemicals to clean heavy dirt, do not use paint thinner, ketone, nor alcohol.
- Insert the specific screws vertically to the part when installing an plastic part.
  Be careful not to tighten screws too much.

SAFETY CHECK-OUT

After correcting the original service problem, perform the following safety checks before releasing the set to the customer.

1. Follow the precautions.
   Areas that require special attention during service are marked with labels or stamps on cabinets, chassis, parts, etc. Be sure to follow these precautions and instructions in the instruction manual.
2. Reinstall parts and route wiring as before
   Be sure to return all parts installations and wiring to their original positions.
3. Perform safety inspection after service
   Confirm that safety is ensured by inspecting whether screws, parts, and wiring that were removed for service have been returned to their original positions, and whether there is any deterioration in the area surrounding the serviced area.

Caution

Danger of explosion if battery is incorrectly replaced.
Replace only with the same or equivalent type.
Dispose of used batteries according to the instructions.

SAFETY-RELATED COMPONENT WARNING!!

COMPONENTS IDENTIFIED BY MARK ⚠ OR DOTTED LINE WITH MARK ⚠ ON THE SCHEMATIC DIAGRAMS AND IN THE PARTS LIST ARE CRITICAL TO SAFE OPERATION.
REPLACE THESE COMPONENTS WITH SONY PARTS WHOSE PART NUMBERS APPEAR AS SHOWN IN THIS MANUAL OR IN SUPPLEMENTS PUBLISHED BY SONY.

ATTENTION AU COMPOSANT AYANT RAPPORT À LA SÉCURITÉ!

LES COMPOSANTS IDENTIFIÉS PAR UNE MARQUE ⚠ SUR LES DIAGRAMMES SCHÉMATIQUES ET LA LISTE DES PIÈCES SONT CRITIQUES POUR LA SÉCURITÉ DE FONCTIONNEMENT. NE REMPLACER CES COMPOSANTS QUE PAR DES PIÈCES SONY DONT LES NUMÉROS SONT DONNÉS DANS CE MANUEL OU DANS LES SUPPLÉMENTS PUBLIÉS PAR SONY.

989694811
2024D33-1 © 2024.04

DISASSEMBLY

OPERATION NOTES

Make sure that the conductive side of a flexible board does not have any stain or foreign materials.

Do not touch the conductive side of flexible boards with bare hands.

When opening the connector's holder in direction A, do not open it with excessive force.

Type 1

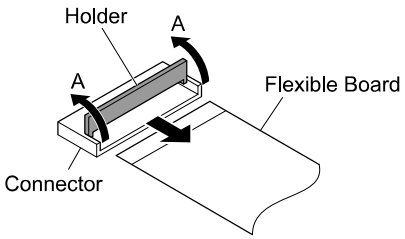

Type 2

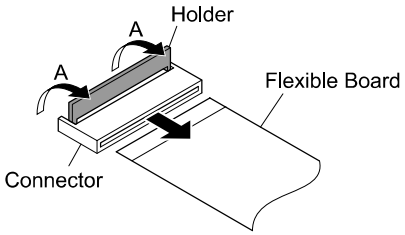

When removing the connector (without holder), pull out a flexible board straight.

Type 3

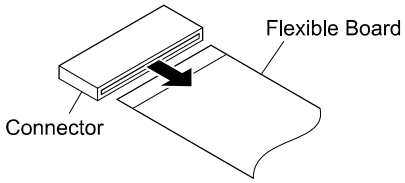

- Make sure that the flat cable and flexible board are not cracked or bent at the contact end.
- If the terminal is cracked or came off, replace it.

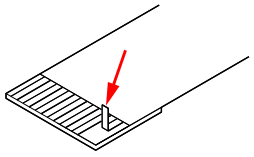

- Do not apply excessive force to the gilded flexible board.
- The proper way to disconnect a connector is to grab the connector instead of the wires. If you pull on the wires, they might be broken.

DISASSEMBLY FLOW

This set can be disassembled in the order shown below.

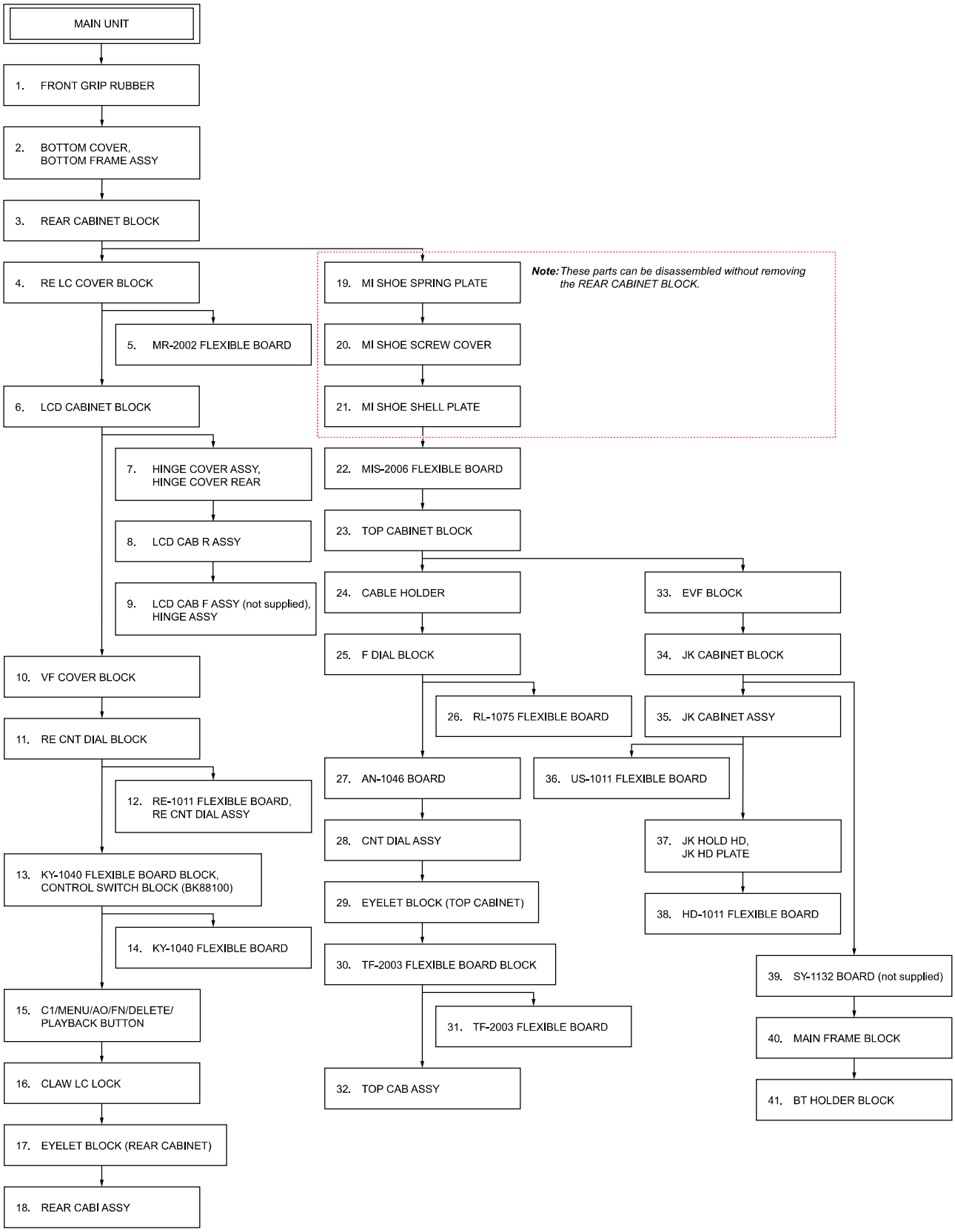

Note: Follow the disassembly procedure in the numerical order given.

1. FRONT GRIP RUBBER

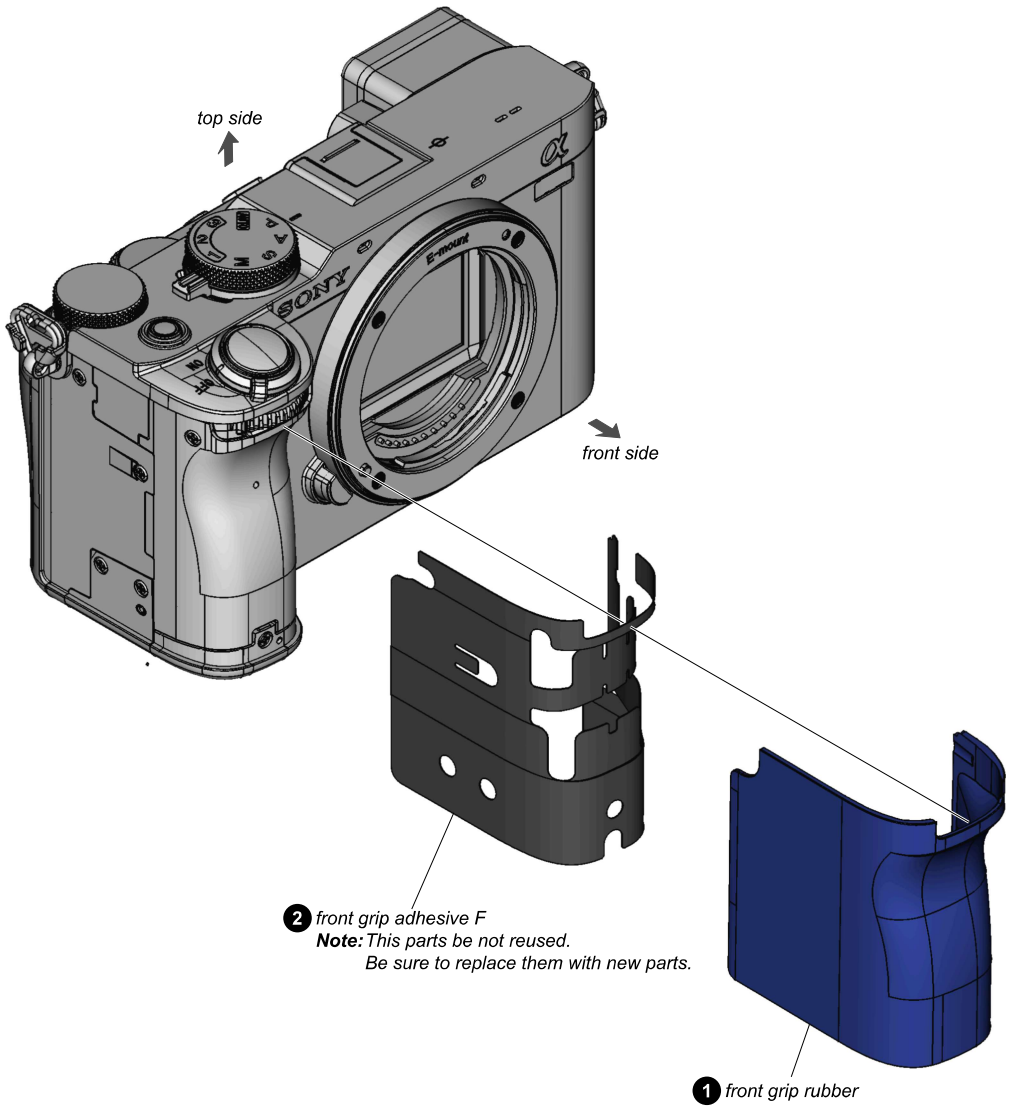

2. BOTTOM COVER, BOTTOM FRAME ASSY

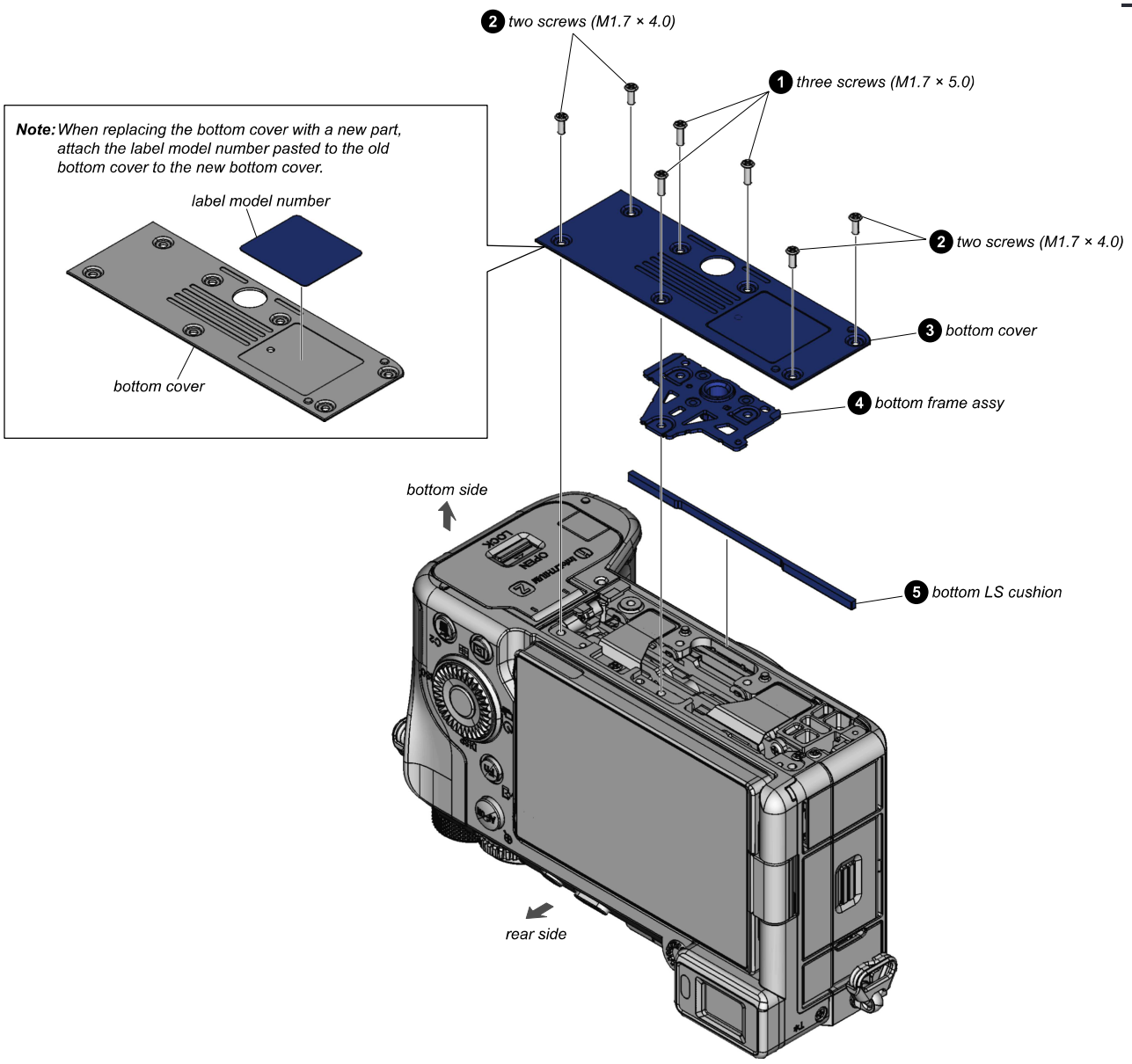

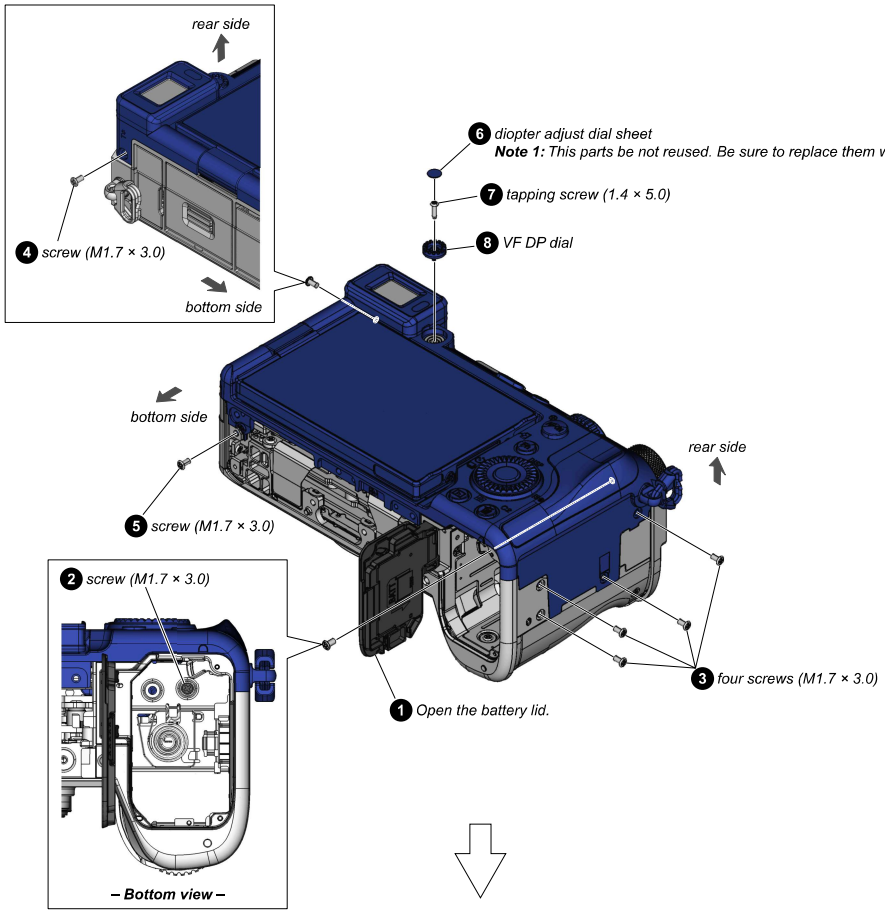
rear side
4 screw (M1.7 × 3.0)
bottom side
6 diopter adjust dial sheet
Note 1: This parts be not reused. Be sure to replace them with new parts.
7 tapping screw (1.4 × 5.0)
8 VF DP dial
bottom side
rear side
5 screw (M1.7 × 3.0)
2 screw (M1.7 × 3.0)
3 four screws (M1.7 × 3.0)
1 Open the battery lid.
– Bottom view –

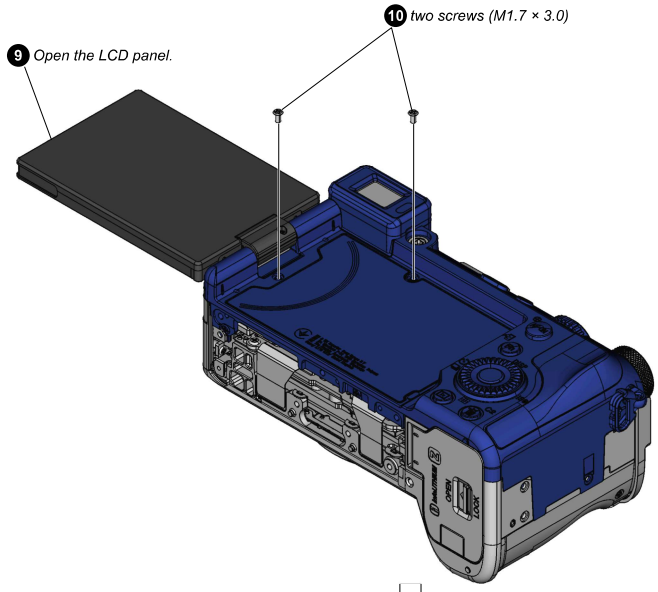
10 two screws (M1.7 × 3.0)
9 Open the LCD panel.

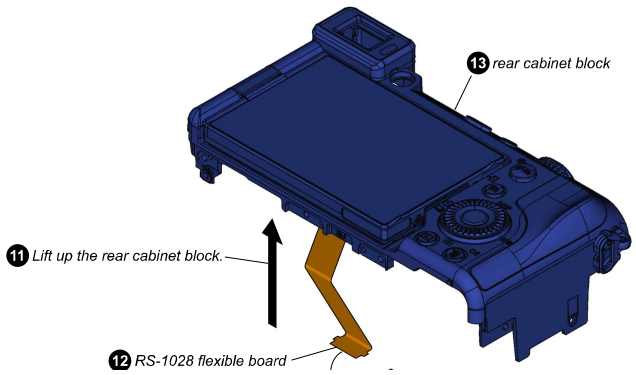
13 rear cabinet block
11 Lift up the rear cabinet block.
12 RS-1028 flexible board

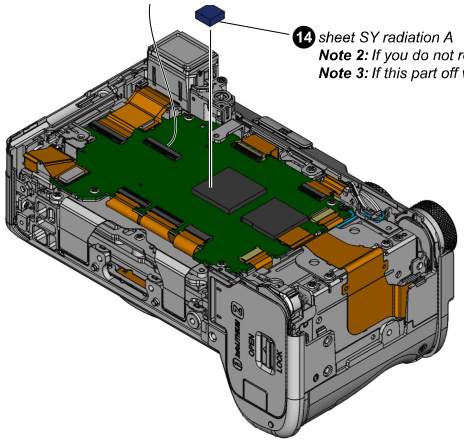

14 *sheet SY radiation A*
Note 2: *If you do not replace the SY-1132 board, you do not need to remove this part.*
Note 3: *If this part off when you remove the rear cabinet block, repaste it to the SY-1132 board.*

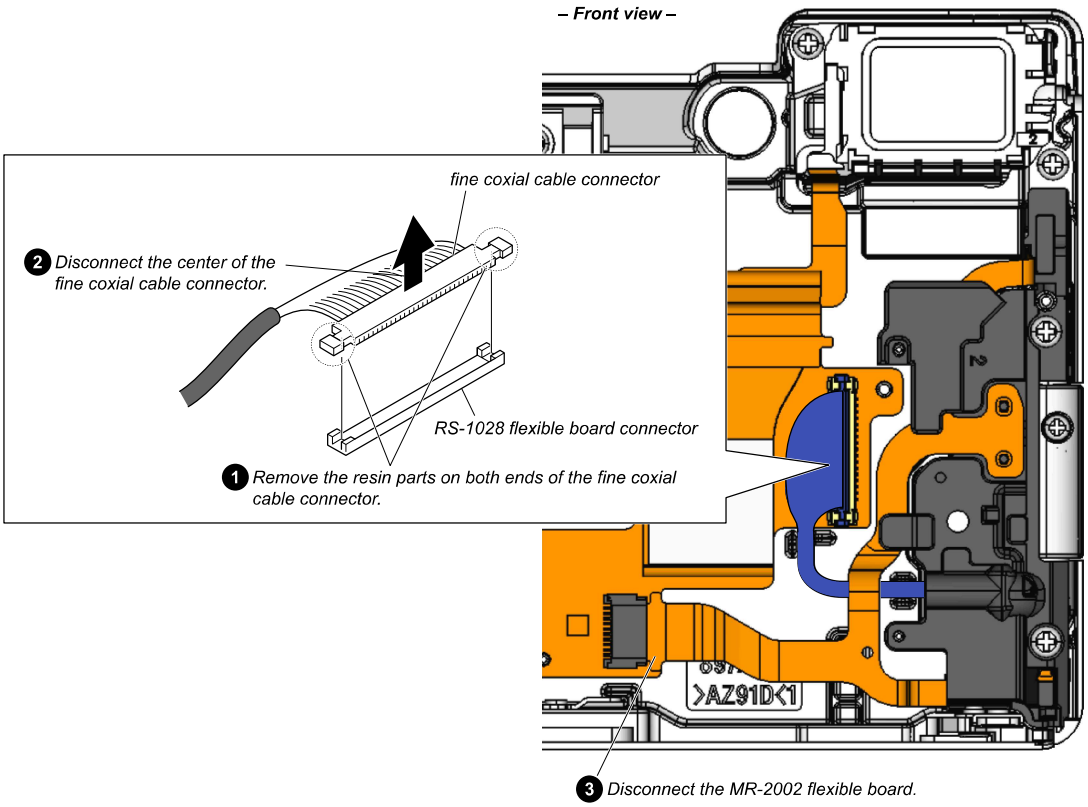
– Front view –
fine coxial cable connector
2 Disconnect the center of the fine coxial cable connector.
RS-1028 flexible board connector
1 Remove the resin parts on both ends of the fine coxial cable connector.
3 Disconnect the MR-2002 flexible board.

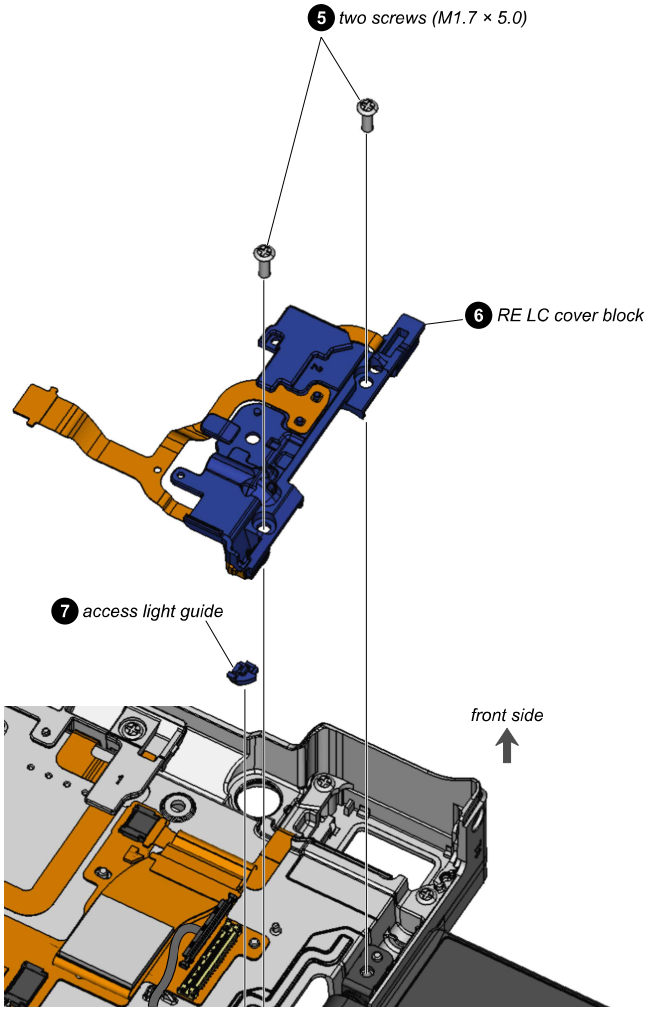
5 two screws (M1.7 × 5.0)
6 RE LC cover block
7 access light guide
front side

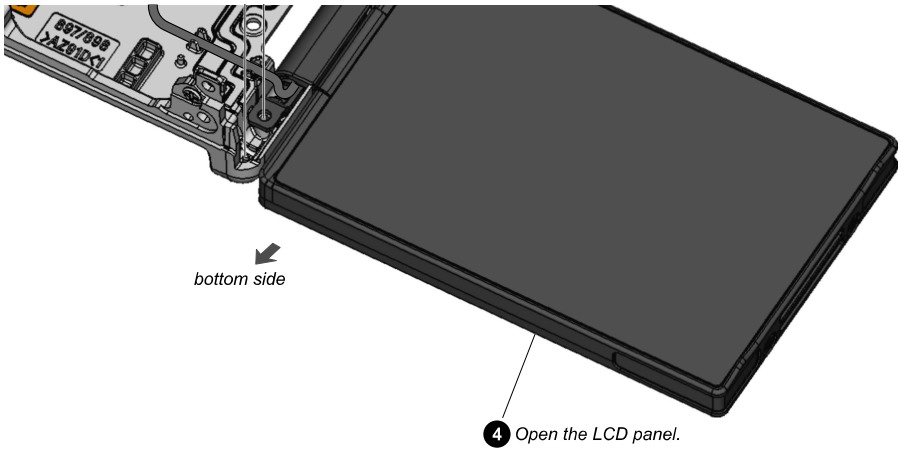

4 Open the LCD panel.

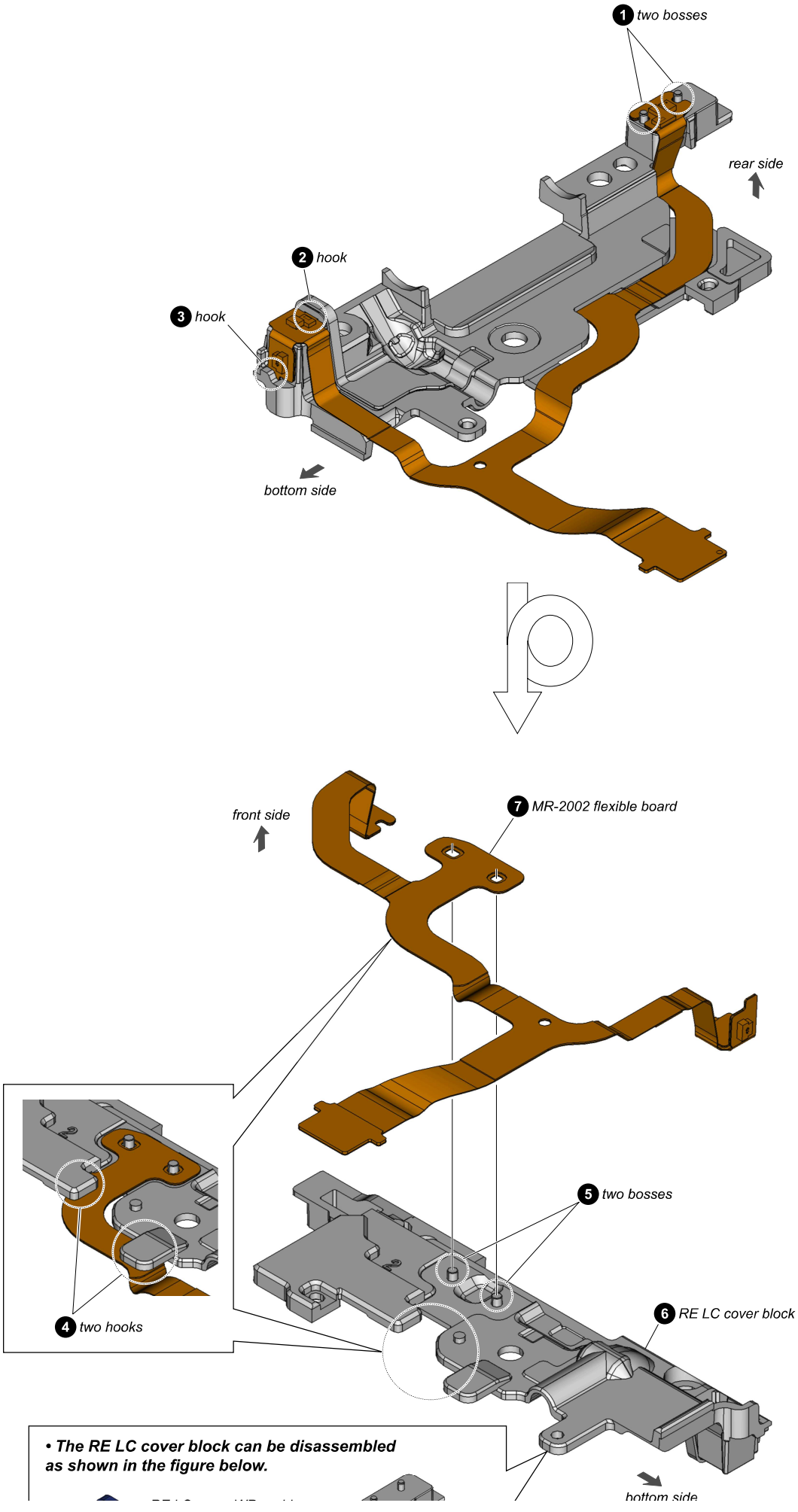

• **The RE LC cover block can be disassembled as shown in the figure below.**

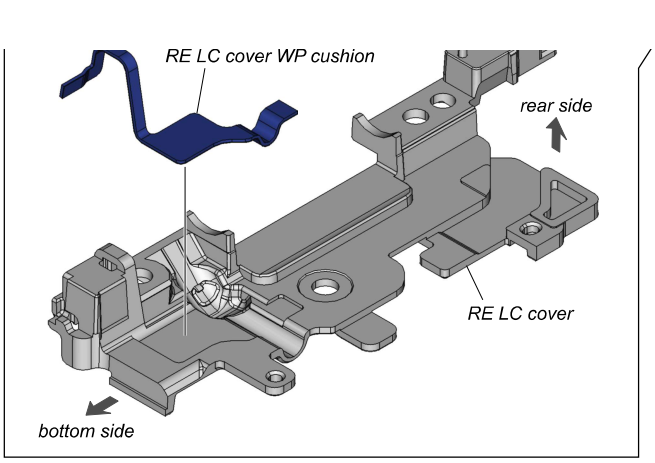
RE LC cover WP cushion
rear side
RE LC cover
bottom side

6. LCD CABINET BLOCK

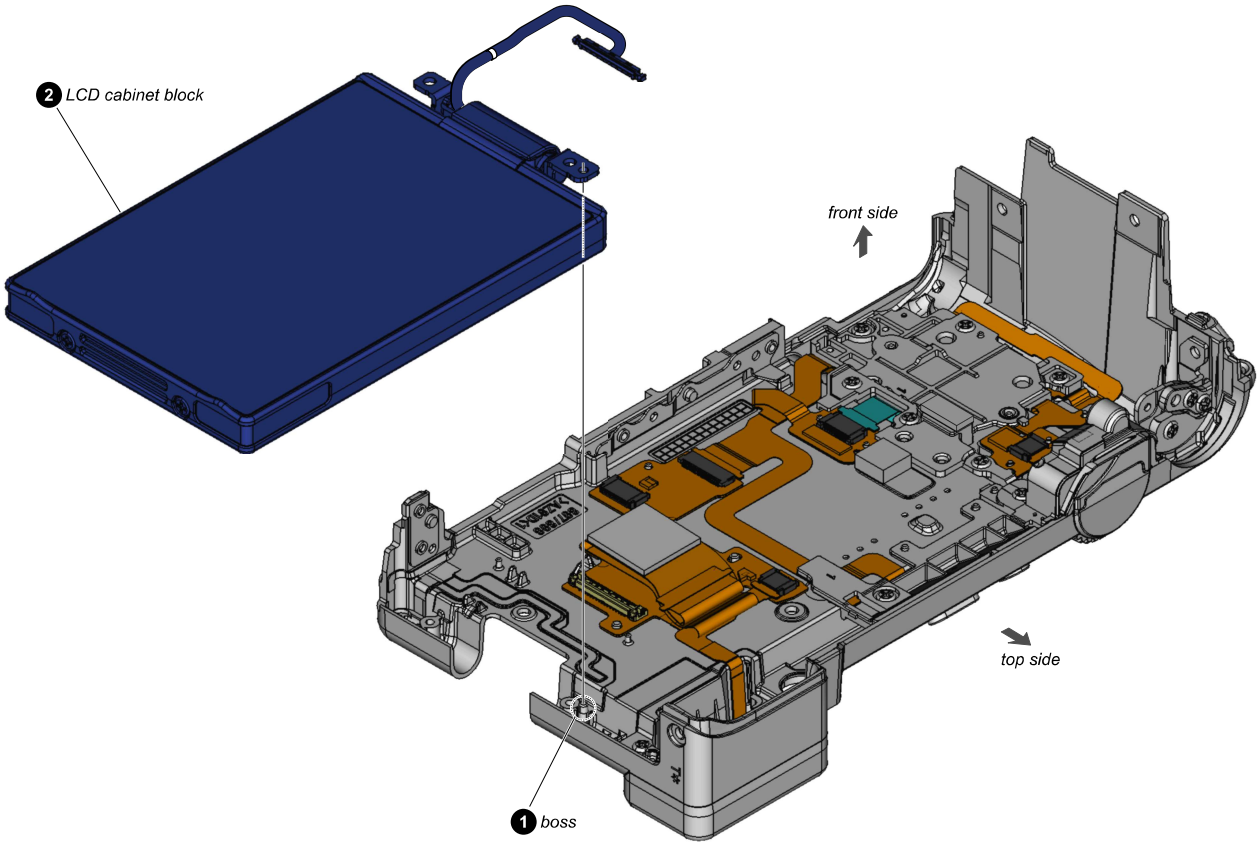

7. HINGE COVER ASSY, HINGE COVER REAR

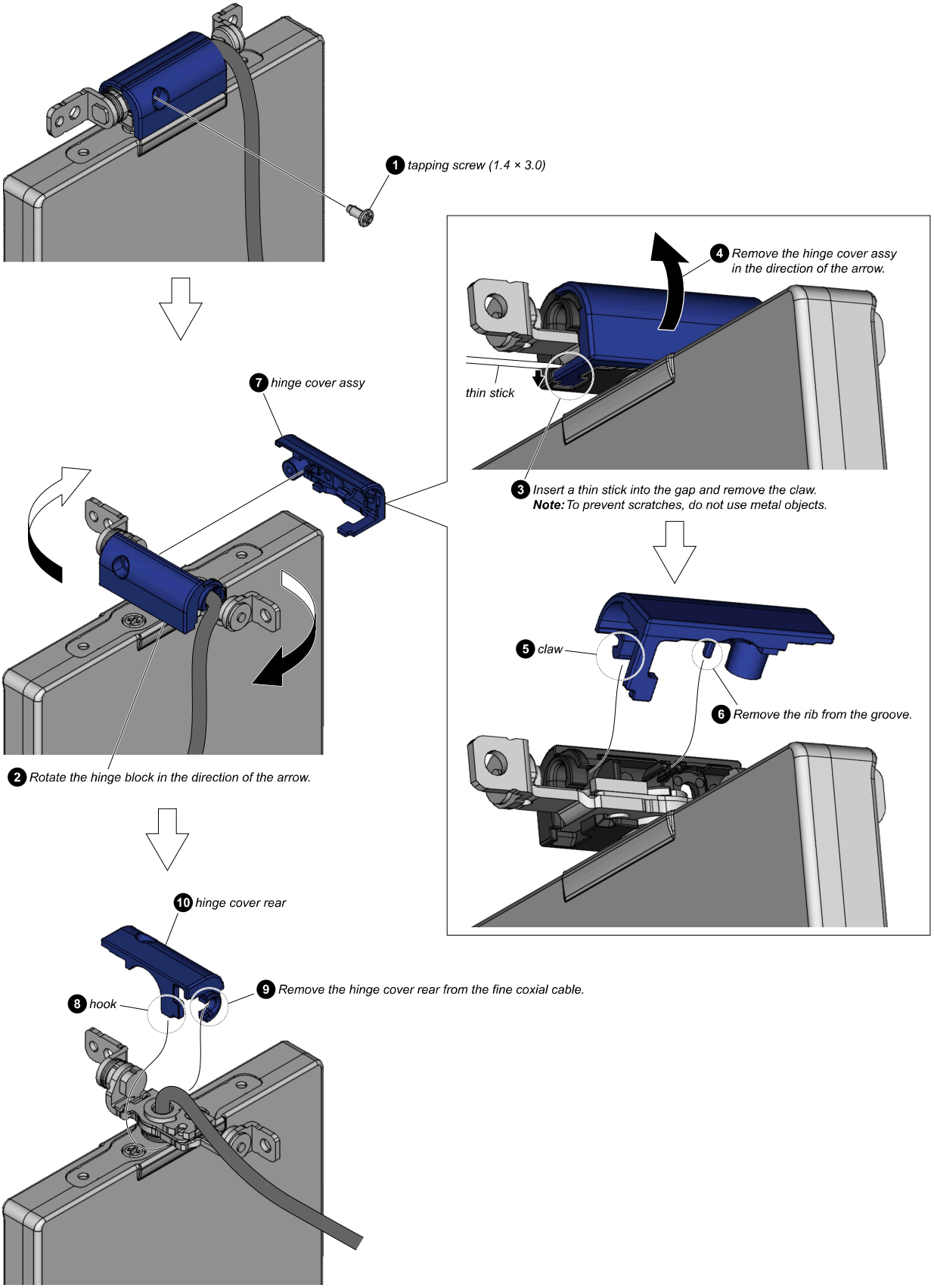

8. LCD CAB R ASSY

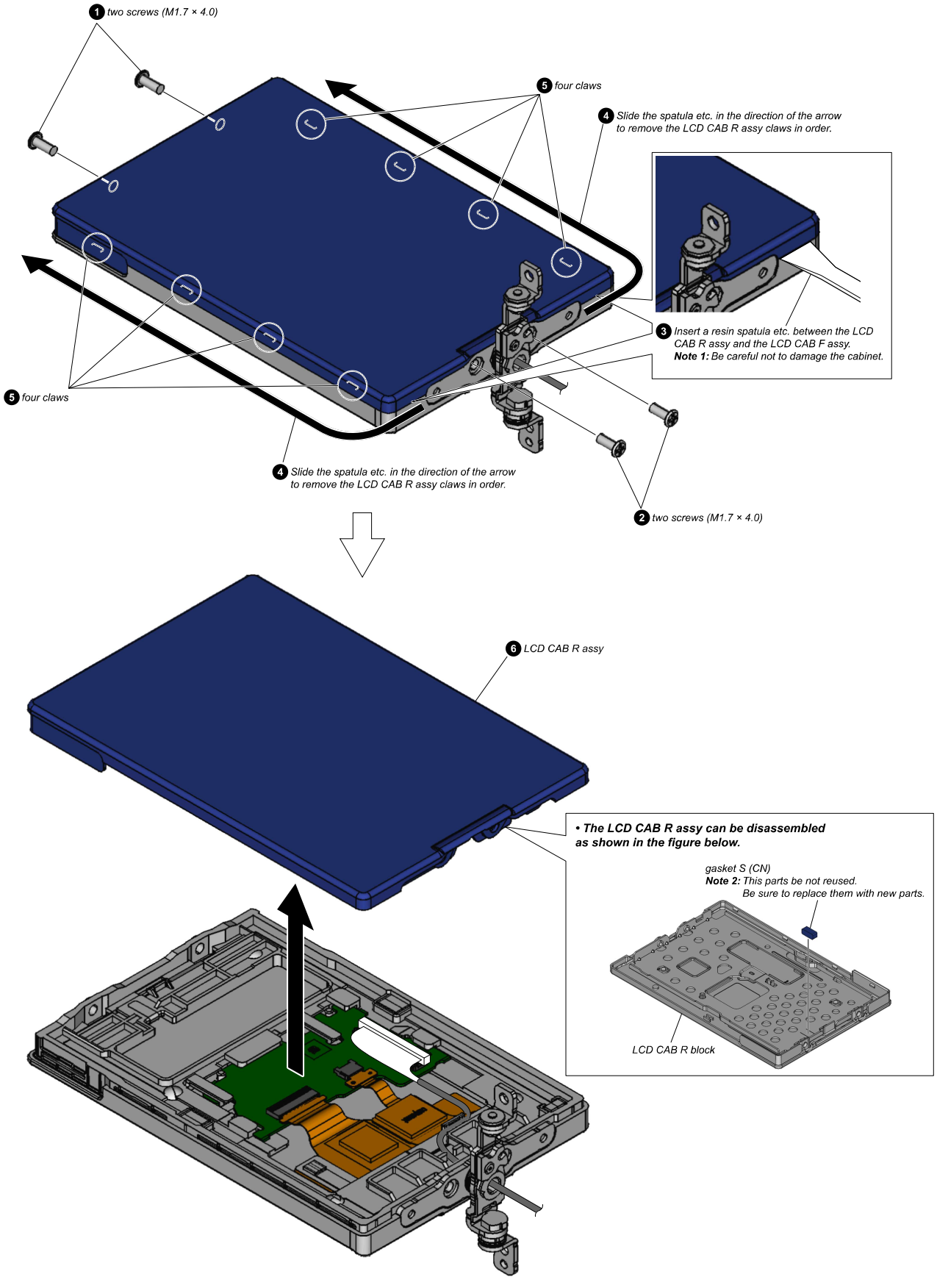

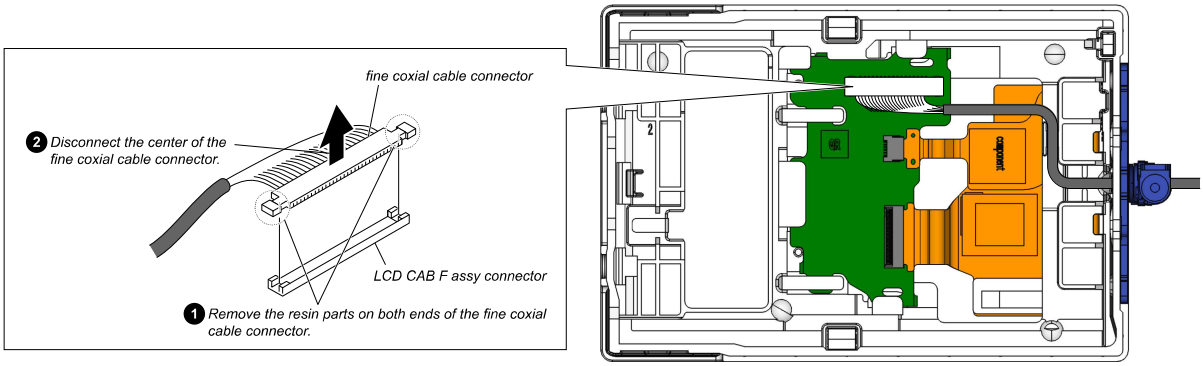

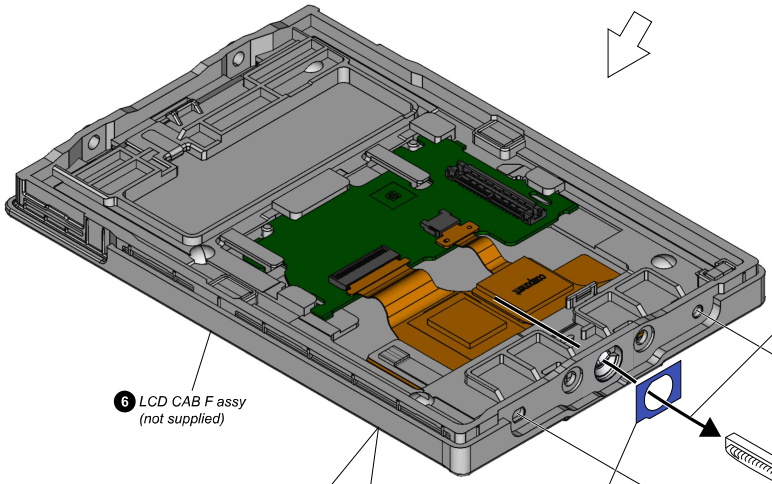

4 Draw the fine coxial cable out of the hole on the LCD CAB F assy.
Note: Take care not to damage the fine coxial cable.

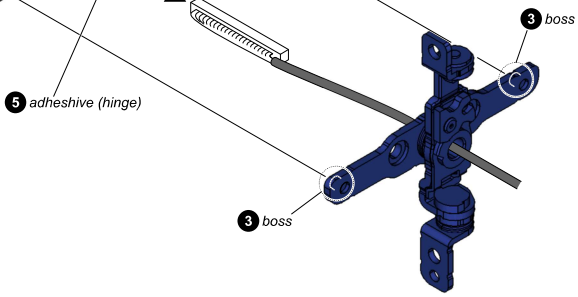

• The LCD CAB F assy can be disassembled as shown in the figure below.

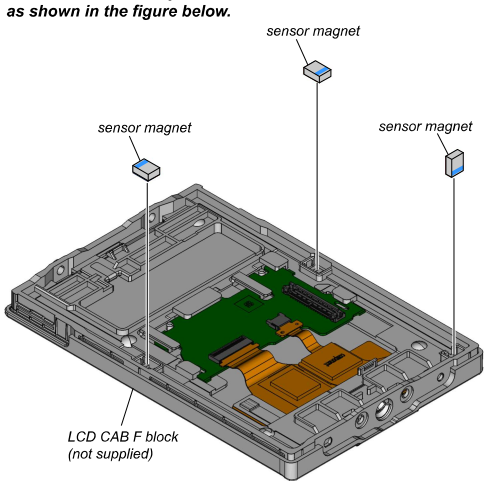

7 Draw the SV WP cable grommet out of the hole.

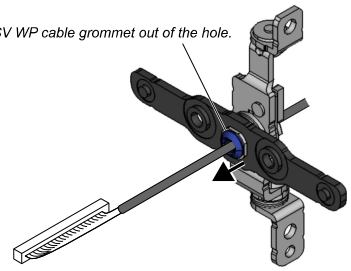

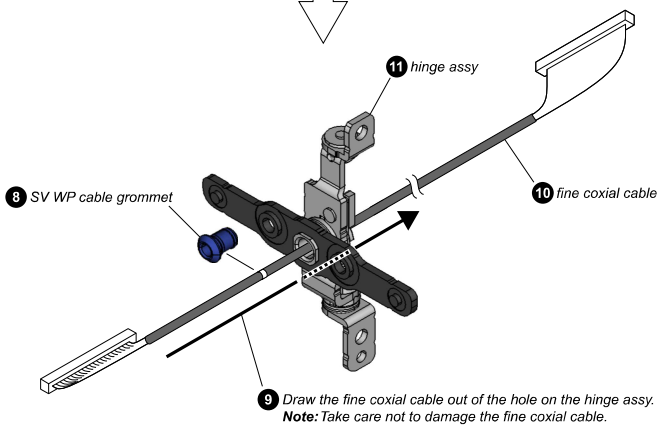

9 Draw the fine coxial cable out of the hole on the hinge assy.
Note: Take care not to damage the fine coxial cable.

10. VF COVER BLOCK

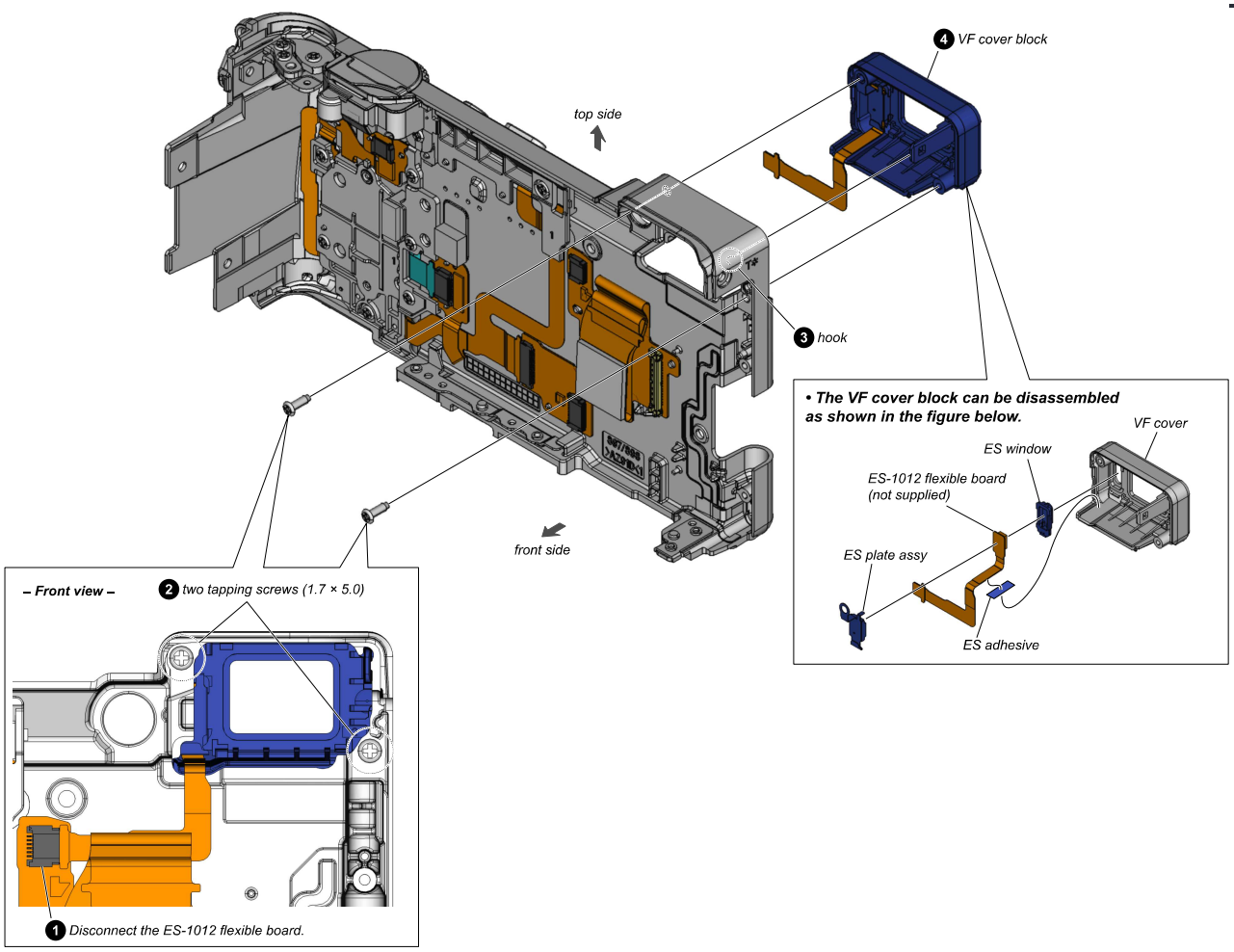

11. RE CNT DIAL BLOCK

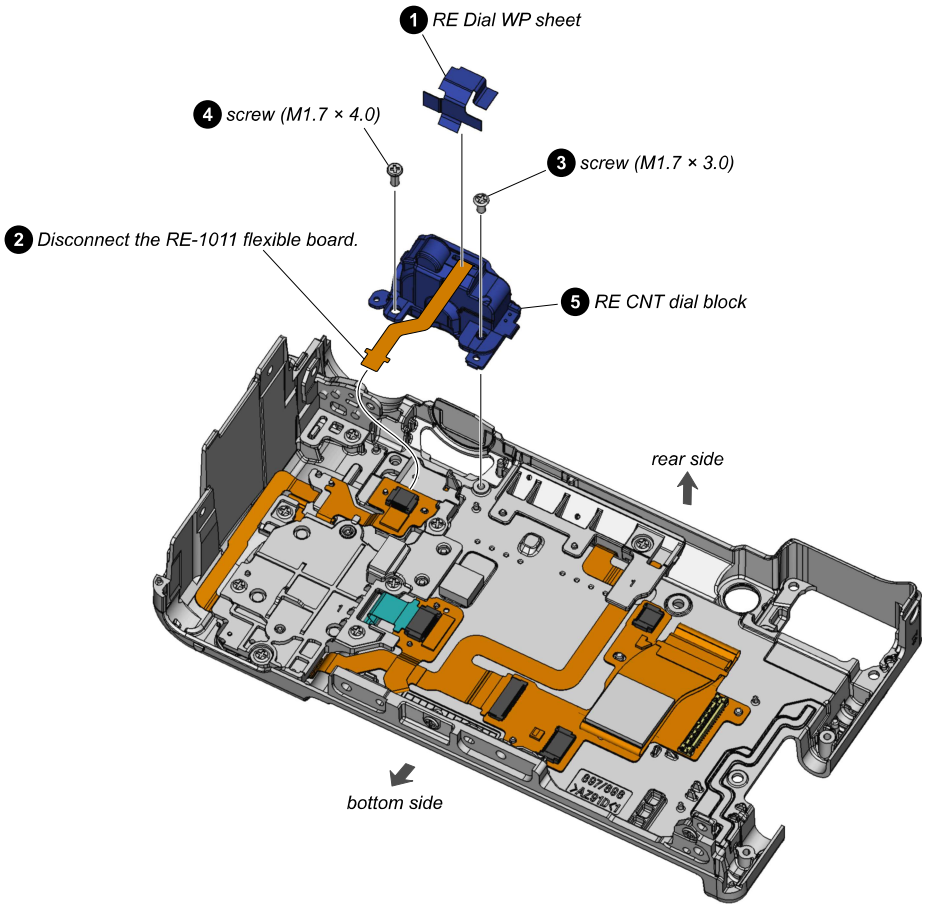

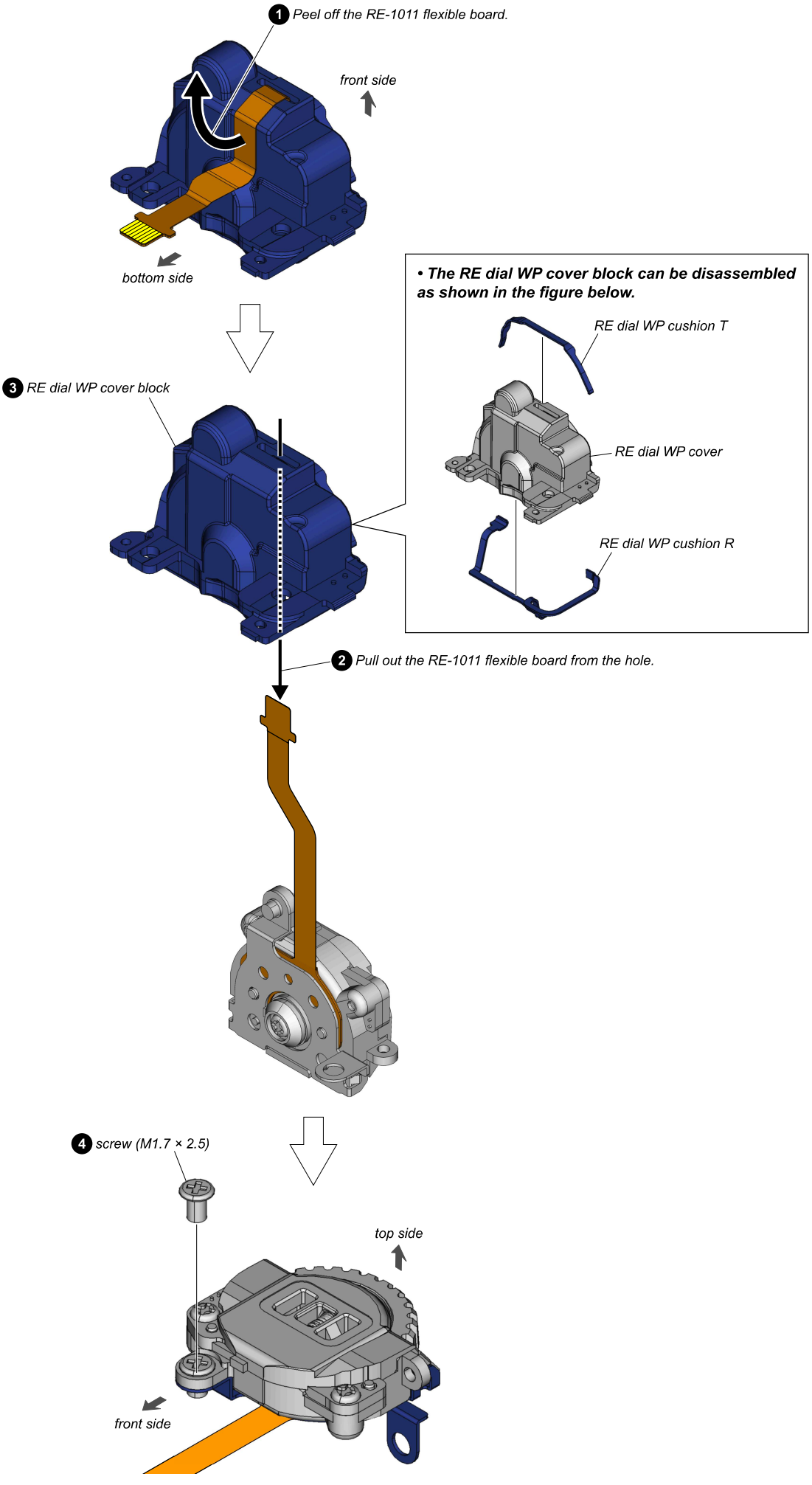
1 Peel off the RE-1011 flexible board.
front side
bottom side
• The RE dial WP cover block can be disassembled as shown in the figure below.
RE dial WP cushion T
RE dial WP cover
RE dial WP cushion R
3 RE dial WP cover block
2 Pull out the RE-1011 flexible board from the hole.
4 screw (M1.7 × 2.5)
top side
front side

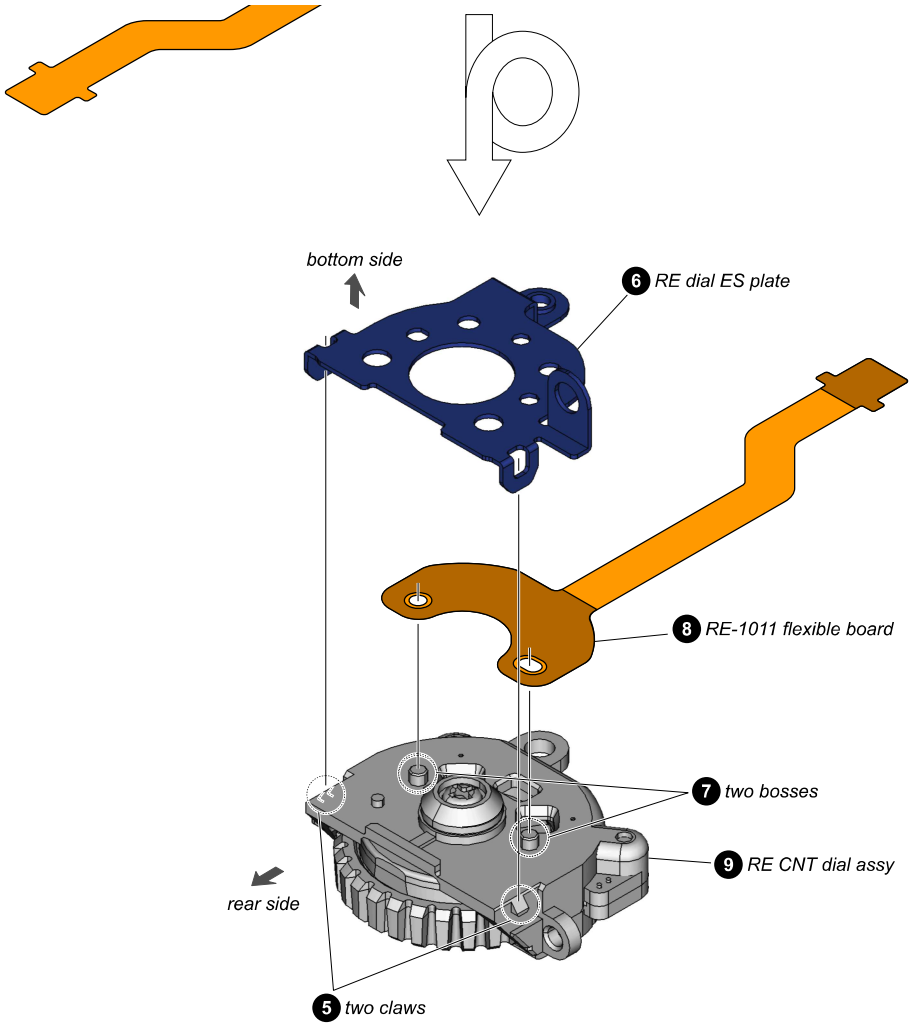
bottom side
6 RE dial ES plate
8 RE-1011 flexible board
7 two bosses
9 RE CNT dial assy
rear side
5 two claws

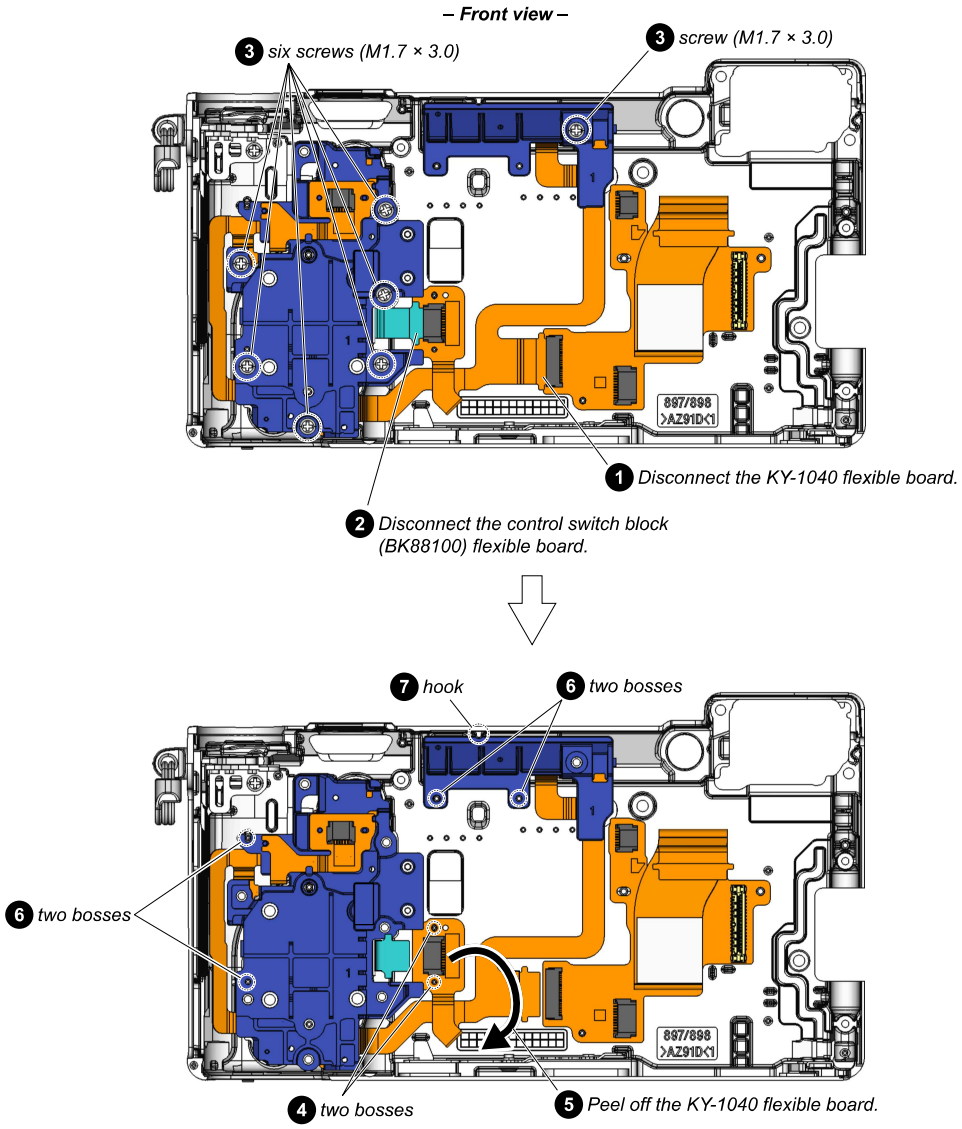
– Front view –
3 six screws (M1.7 × 3.0)
3 screw (M1.7 × 3.0)
897/898
>AZ91D<1
1 Disconnect the KY-1040 flexible board.
2 Disconnect the control switch block (BK88100) flexible board.
7 hook
6 two bosses
6 two bosses
4 two bosses
5 Peel off the KY-1040 flexible board.
8 KY-1040 flexible board block
9 control switch block (BK88100)
front side

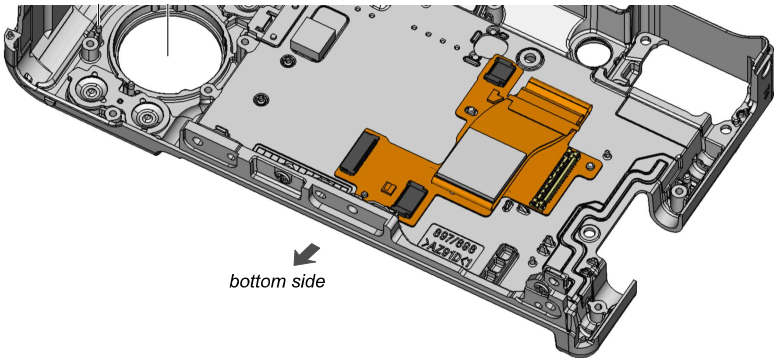

bottom side

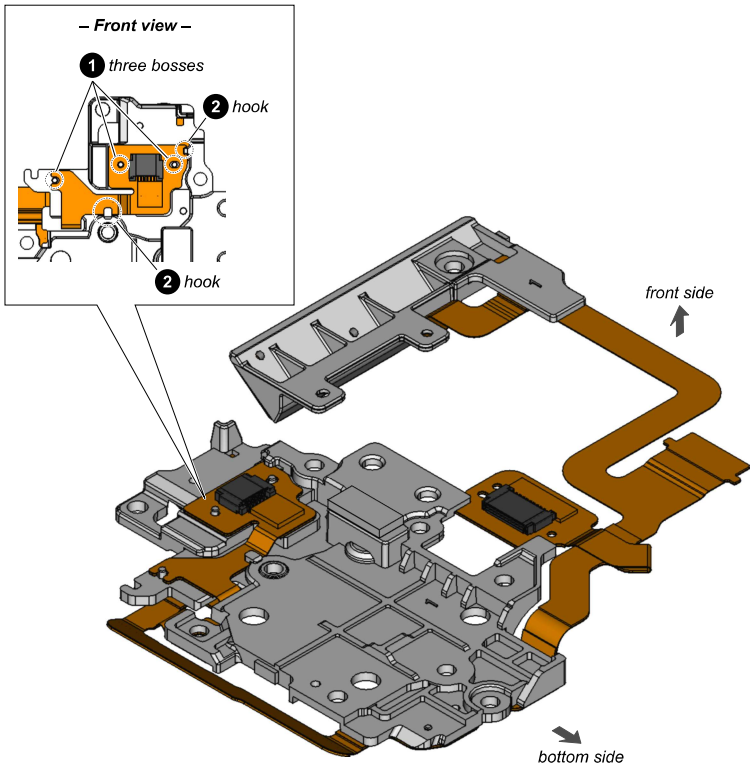
– Front view –
1 three bosses
2 hook
2 hook
front side
bottom side

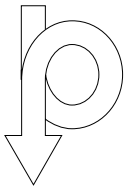

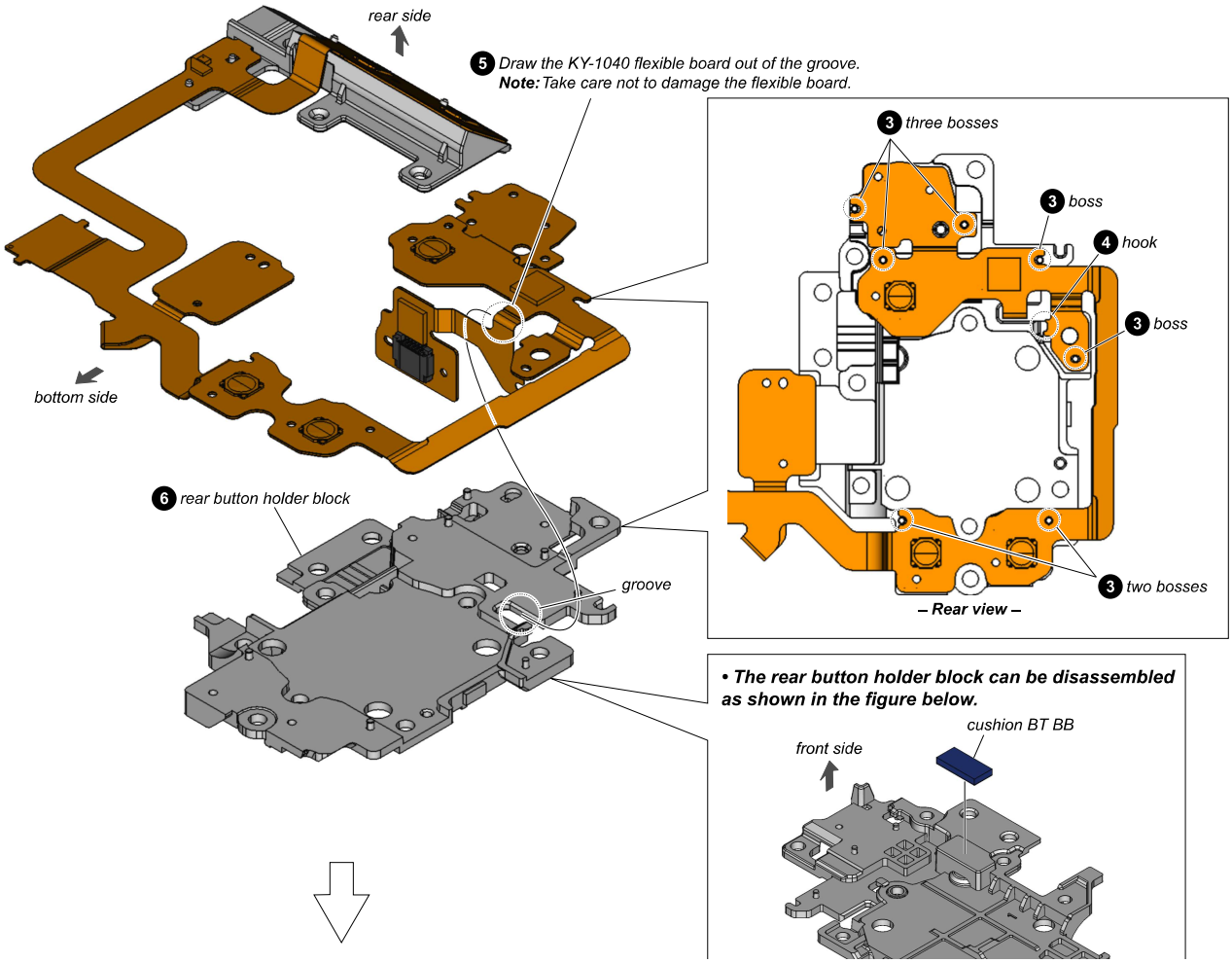
rear side
5 Draw the KY-1040 flexible board out of the groove.
Note: Take care not to damage the flexible board.
bottom side
6 rear button holder block
groove
3 three bosses
3 boss
4 hook
3 boss
3 two bosses
– Rear view –
• The rear button holder block can be disassembled as shown in the figure below.
cushion BT BB
front side

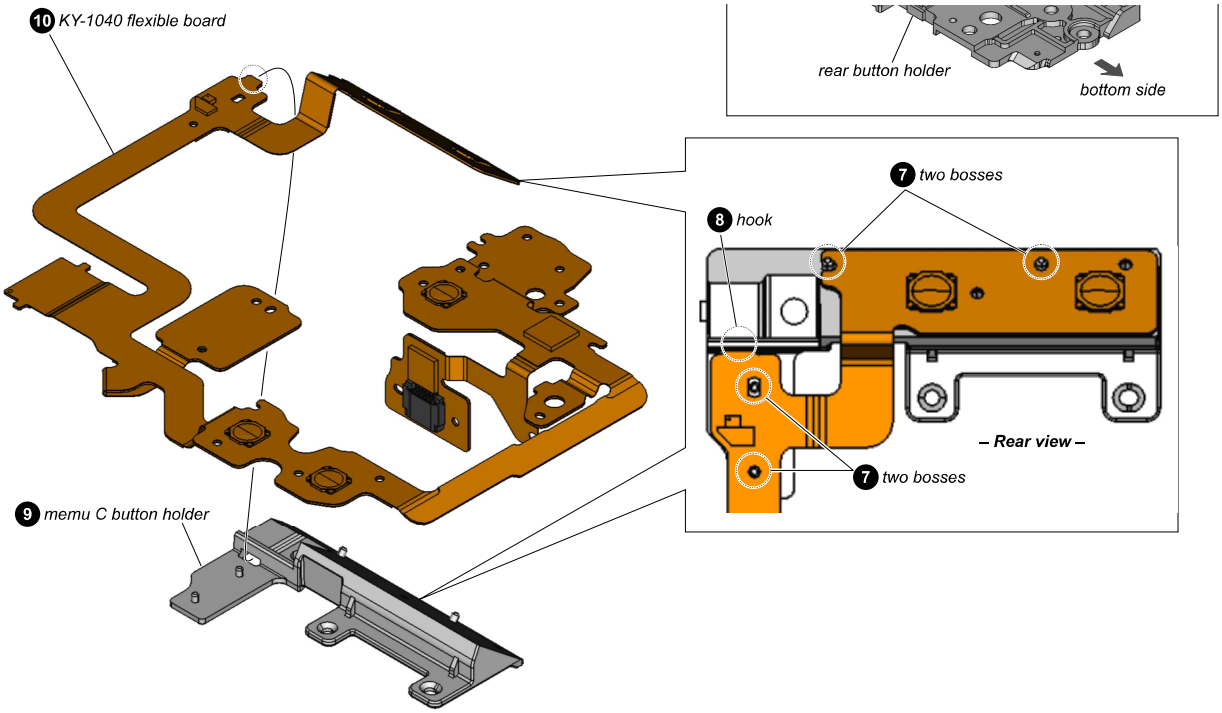
10 KY-1040 flexible board
9 memu C button holder
7 two bosses
8 hook
7 two bosses
– Rear view –
rear button holder
bottom side

15. C1/MENU/AO/FN/DELETE/ PLAYBACK BUTTON

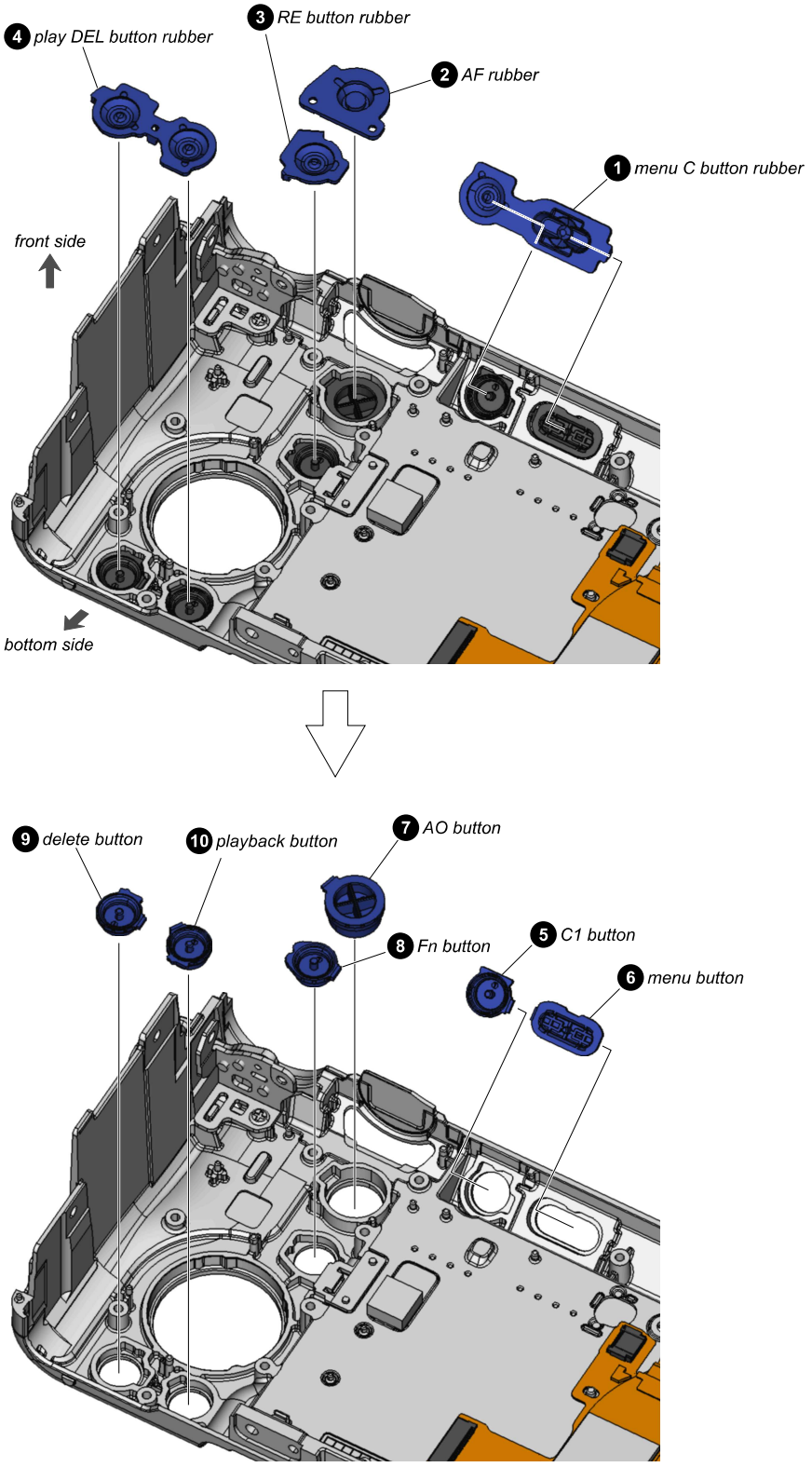

16. CLAW LC LOCK

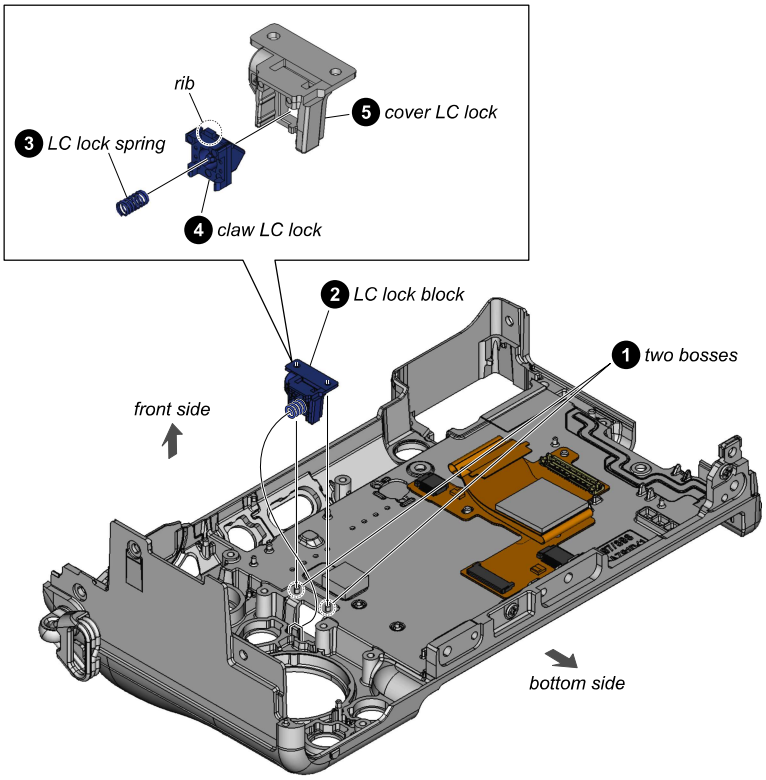

17. EYELET BLOCK (REAR CABINET)

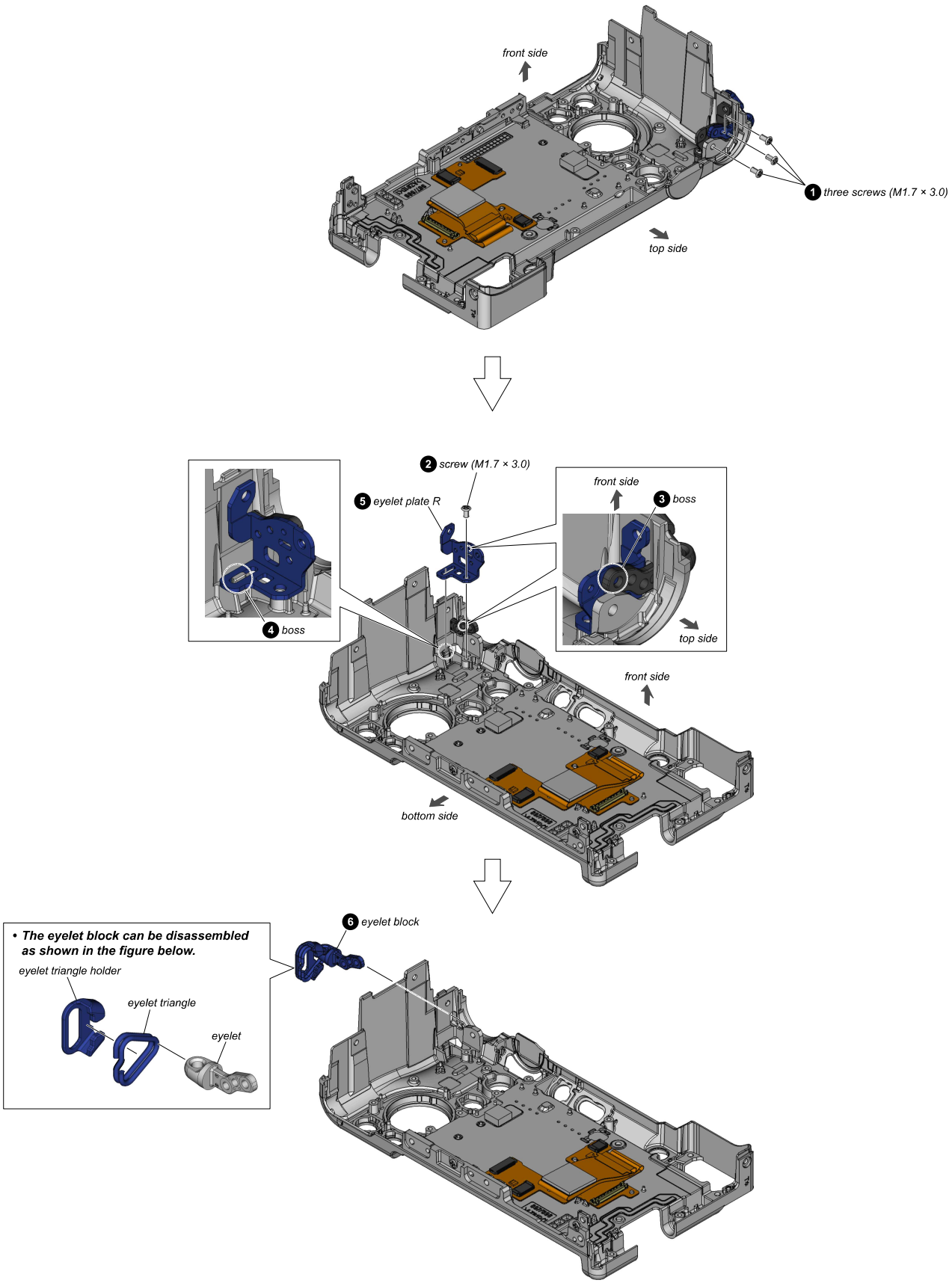

18. REAR CABI ASSY

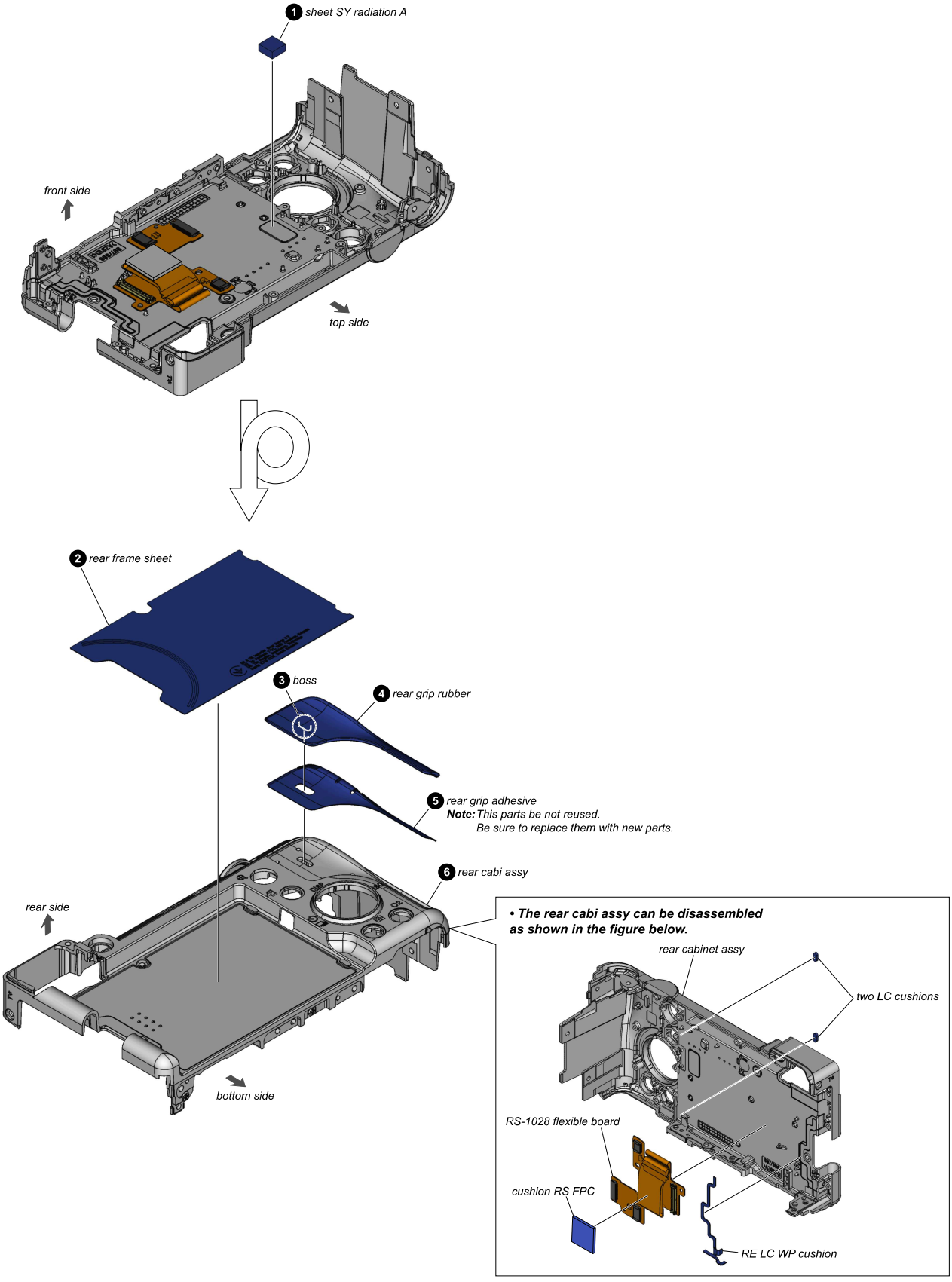

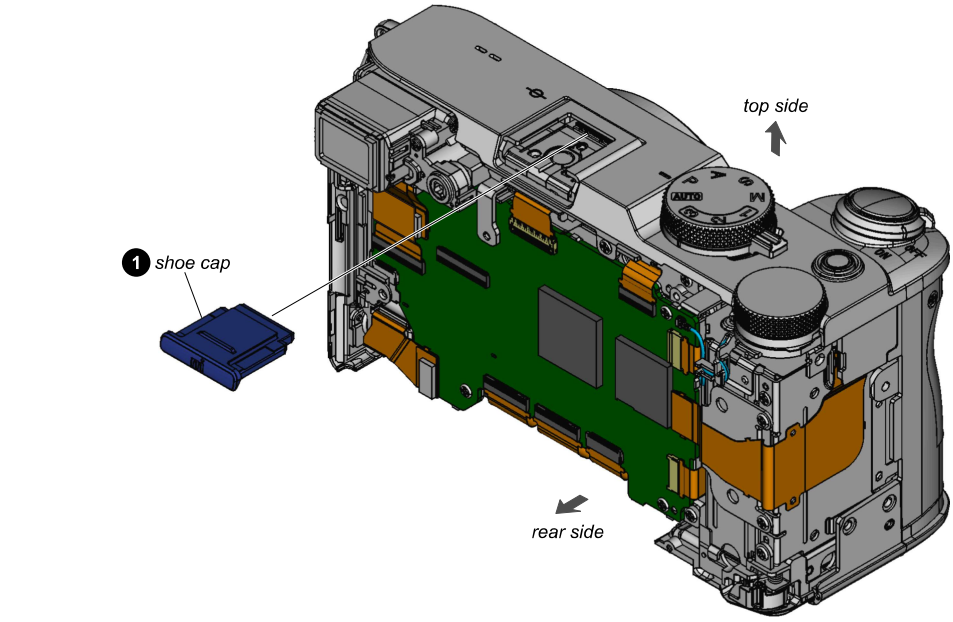
top side
1 shoe cap
rear side

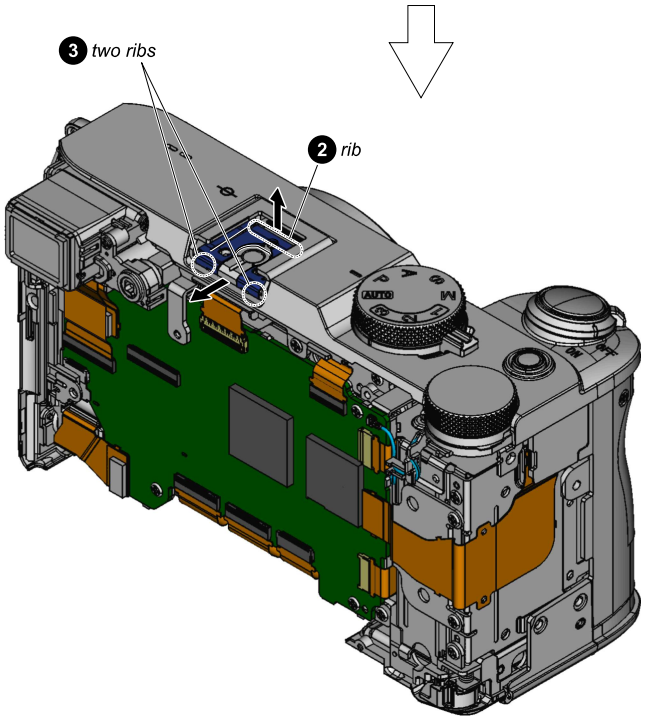
3 two ribs
2 rib

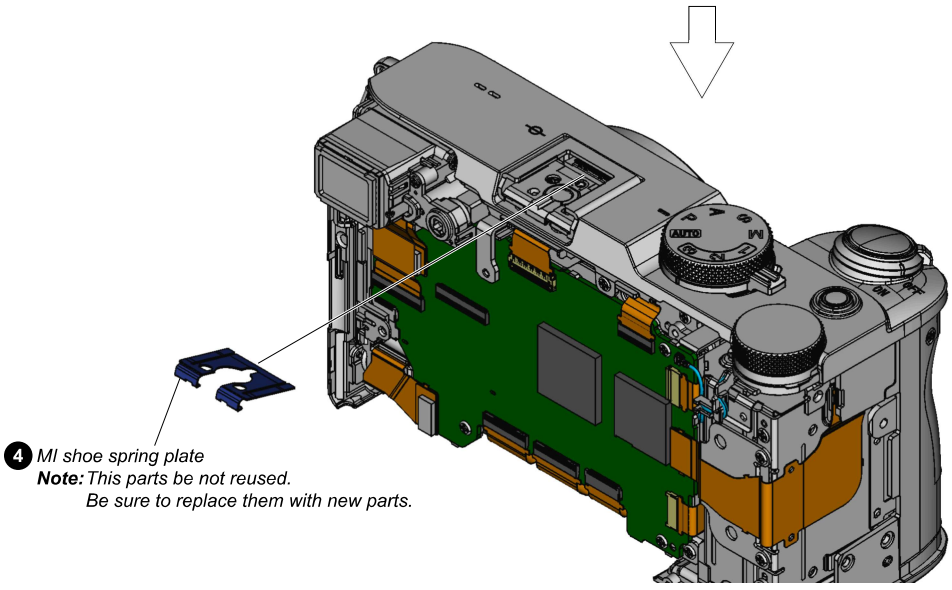
4 MI shoe spring plate
Note: This parts be not reused.
Be sure to replace them with new parts.

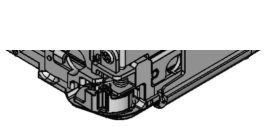

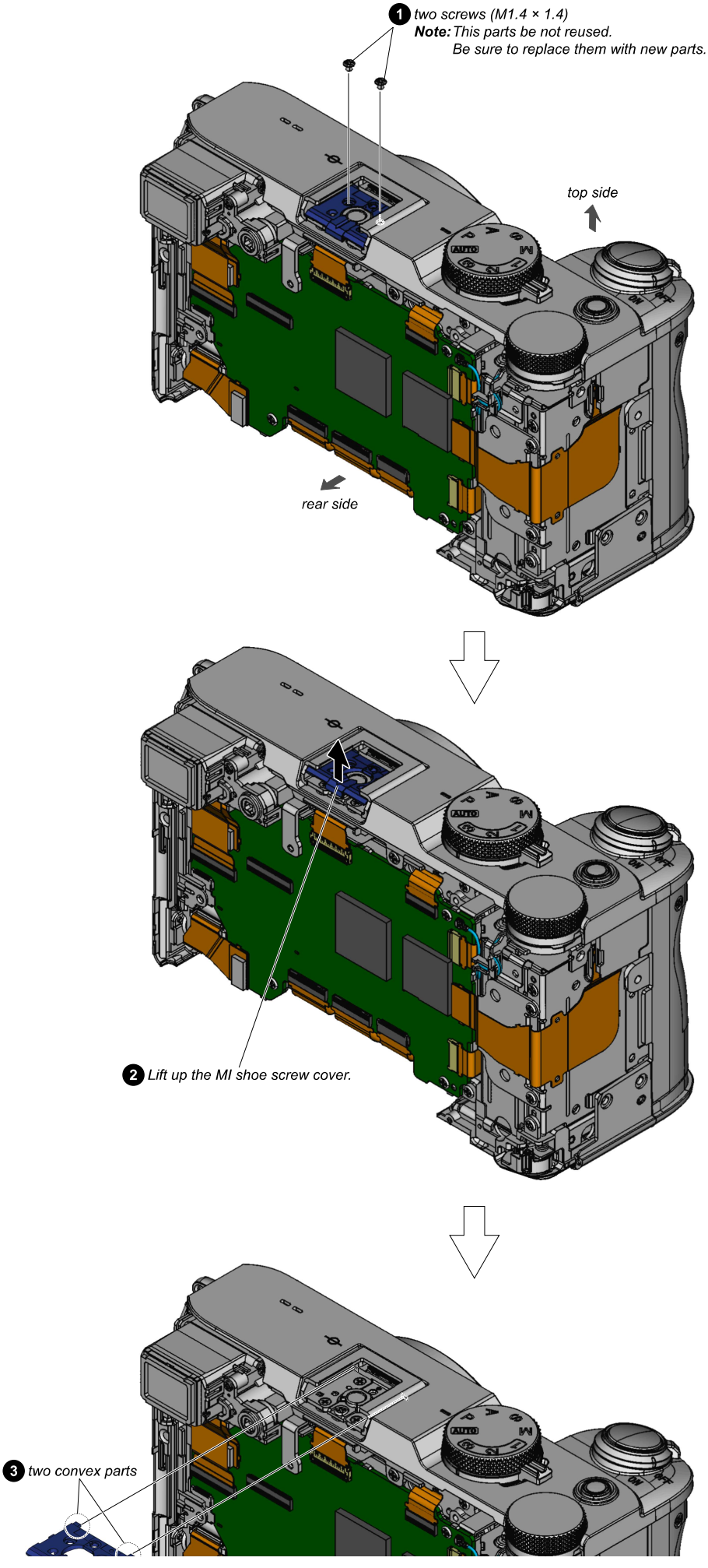
1 two screws (M1.4 × 1.4)
Note: This parts be not reused.
Be sure to replace them with new parts.
top side
rear side
2 Lift up the MI shoe screw cover.
3 two convex parts

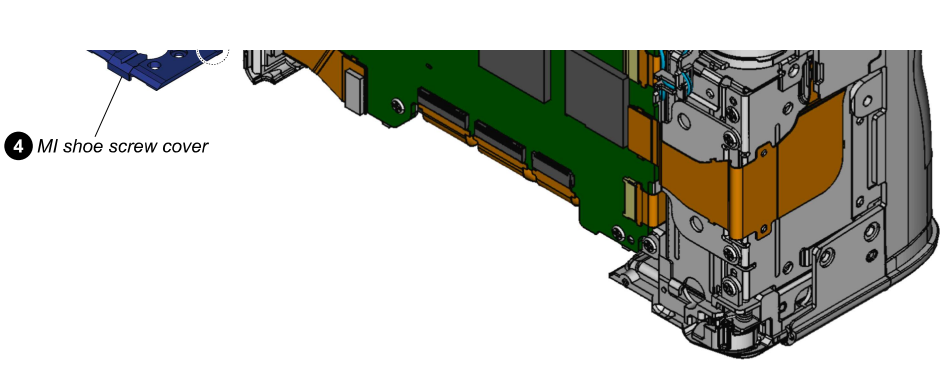
4 MI shoe screw cover

21. MI SHOE SHELL PLATE

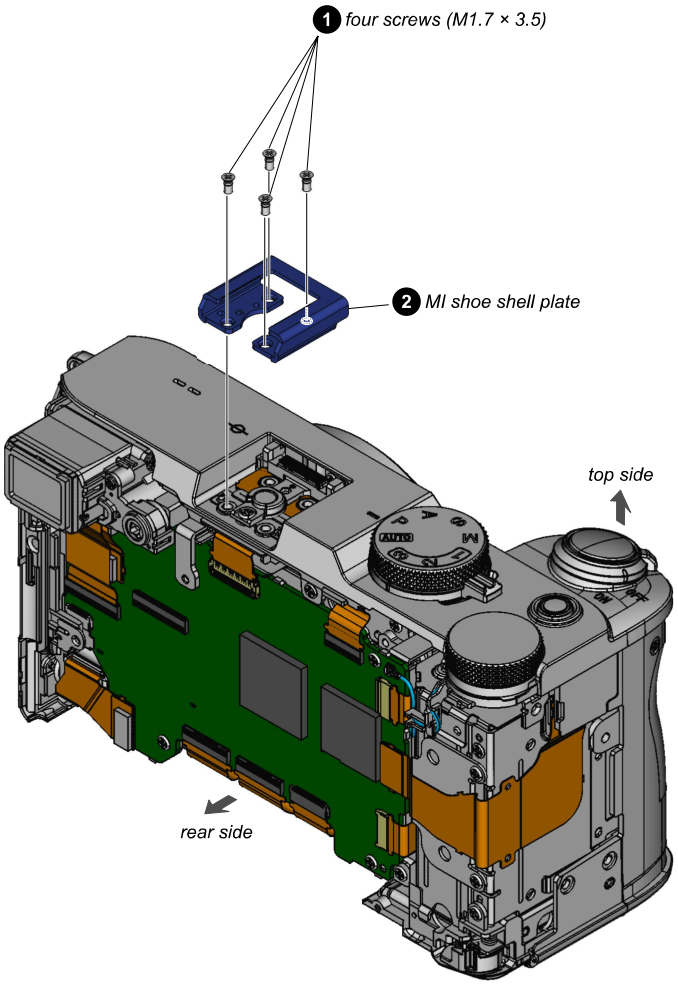

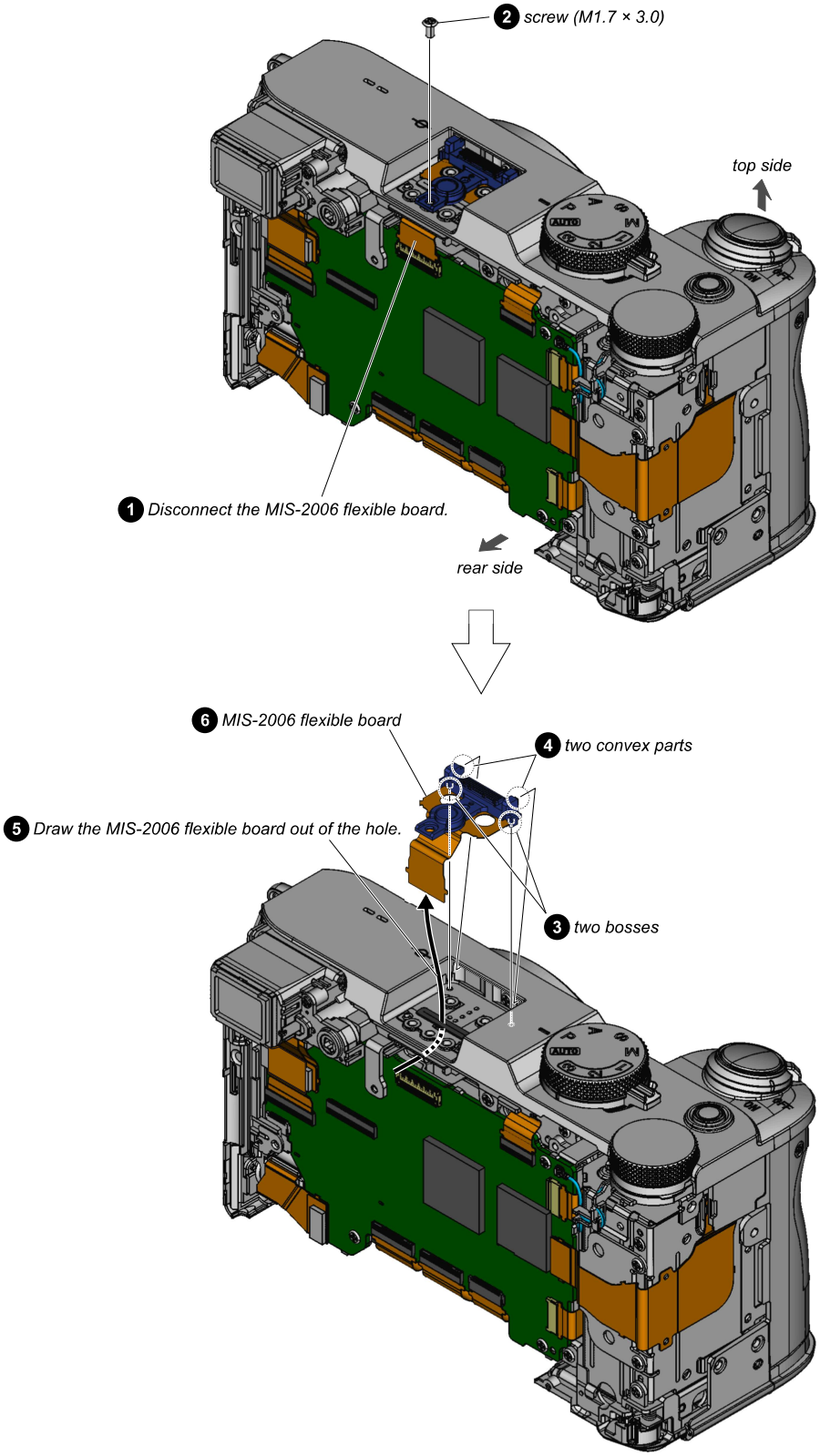
2 screw (M1.7 × 3.0)
top side
1 Disconnect the MIS-2006 flexible board.
rear side
6 MIS-2006 flexible board
4 two convex parts
5 Draw the MIS-2006 flexible board out of the hole.
3 two bosses

23. TOP CABINET BLOCK

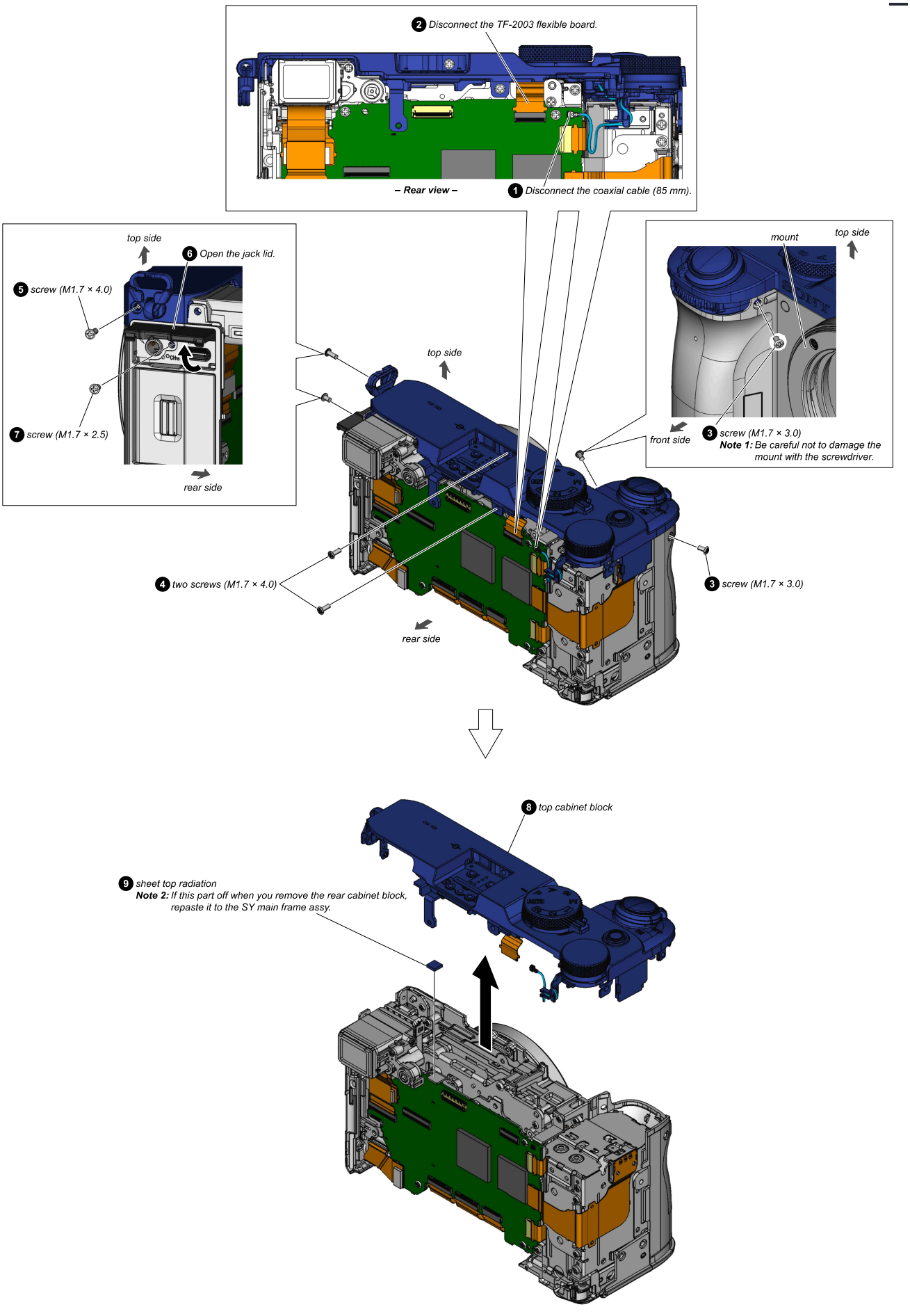

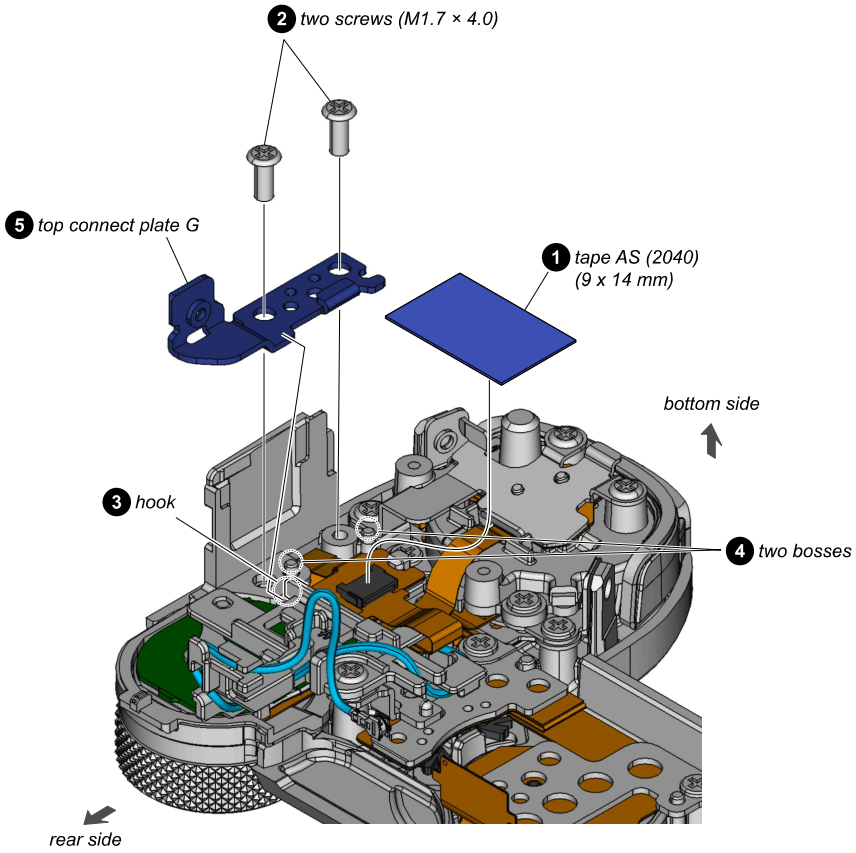
2 two screws (M1.7 × 4.0)
5 top connect plate G
1 tape AS (2040)
(9 x 14 mm)
bottom side
3 hook
4 two bosses
rear side

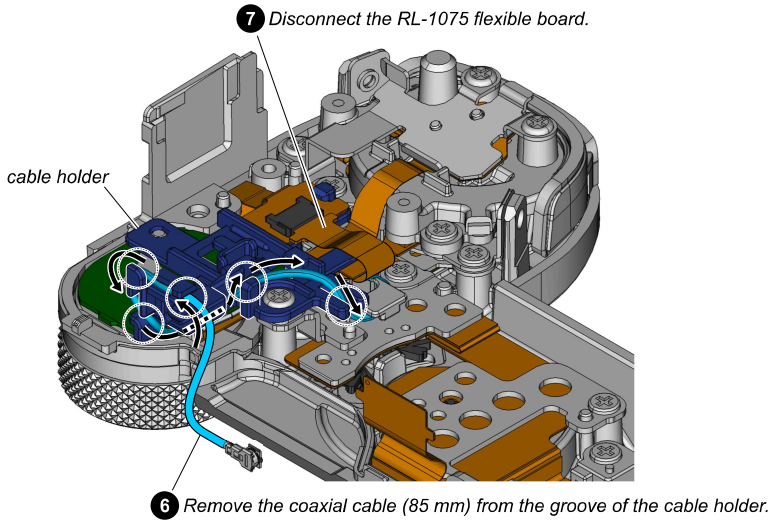
7 Disconnect the RL-1075 flexible board.
cable holder
6 Remove the coaxial cable (85 mm) from the groove of the cable holder.

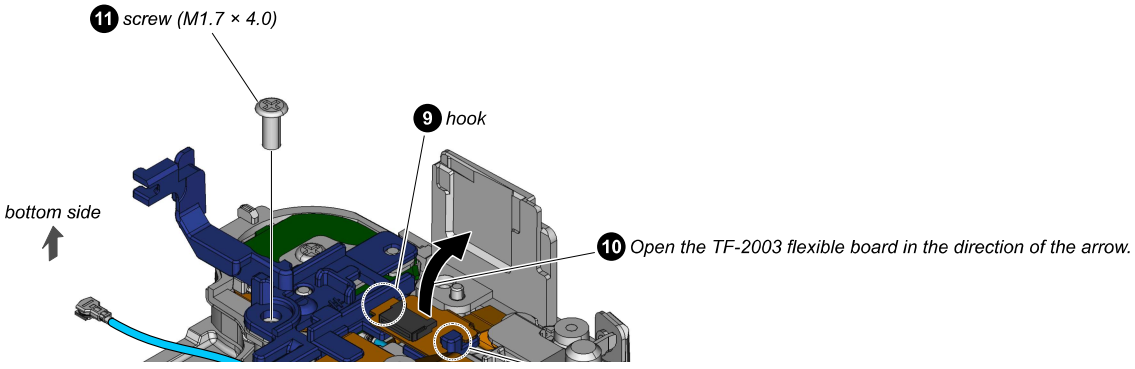
11 screw (M1.7 × 4.0)
9 hook
bottom side
10 Open the TF-2003 flexible board in the direction of the arrow.

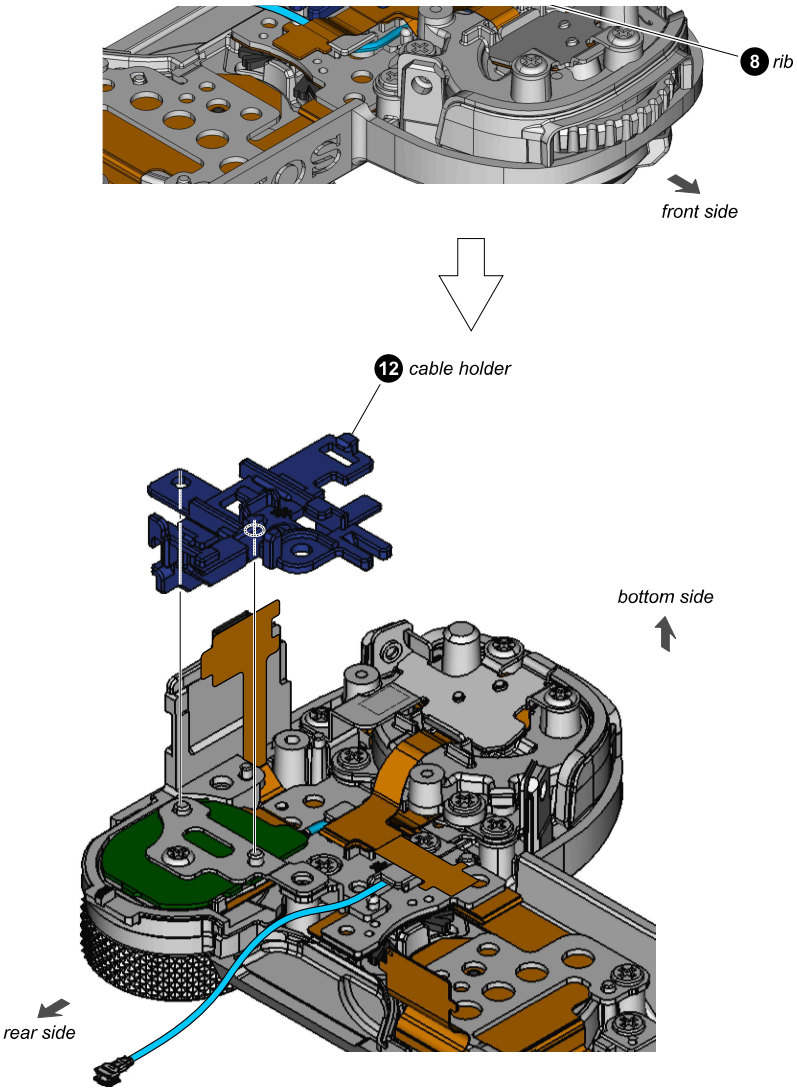
8 rib
front side
12 cable holder
bottom side
rear side

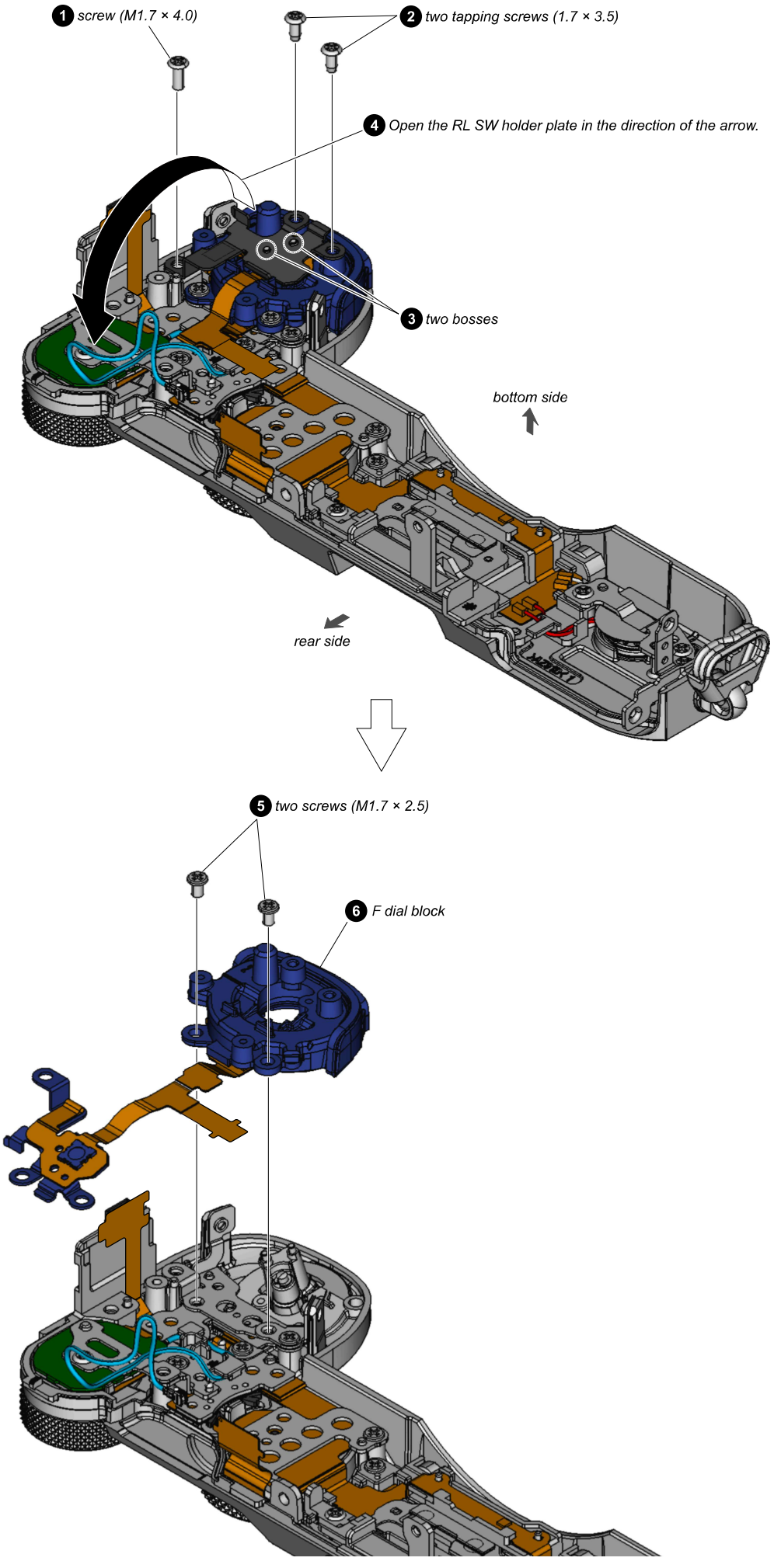
1 screw (M1.7 × 4.0)
2 two tapping screws (1.7 × 3.5)
4 Open the RL SW holder plate in the direction of the arrow.
3 two bosses
bottom side
rear side
5 two screws (M1.7 × 2.5)
6 F dial block

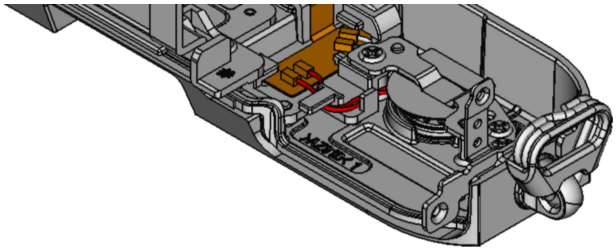

26. RL-1075 FLEXIBLE BOARD

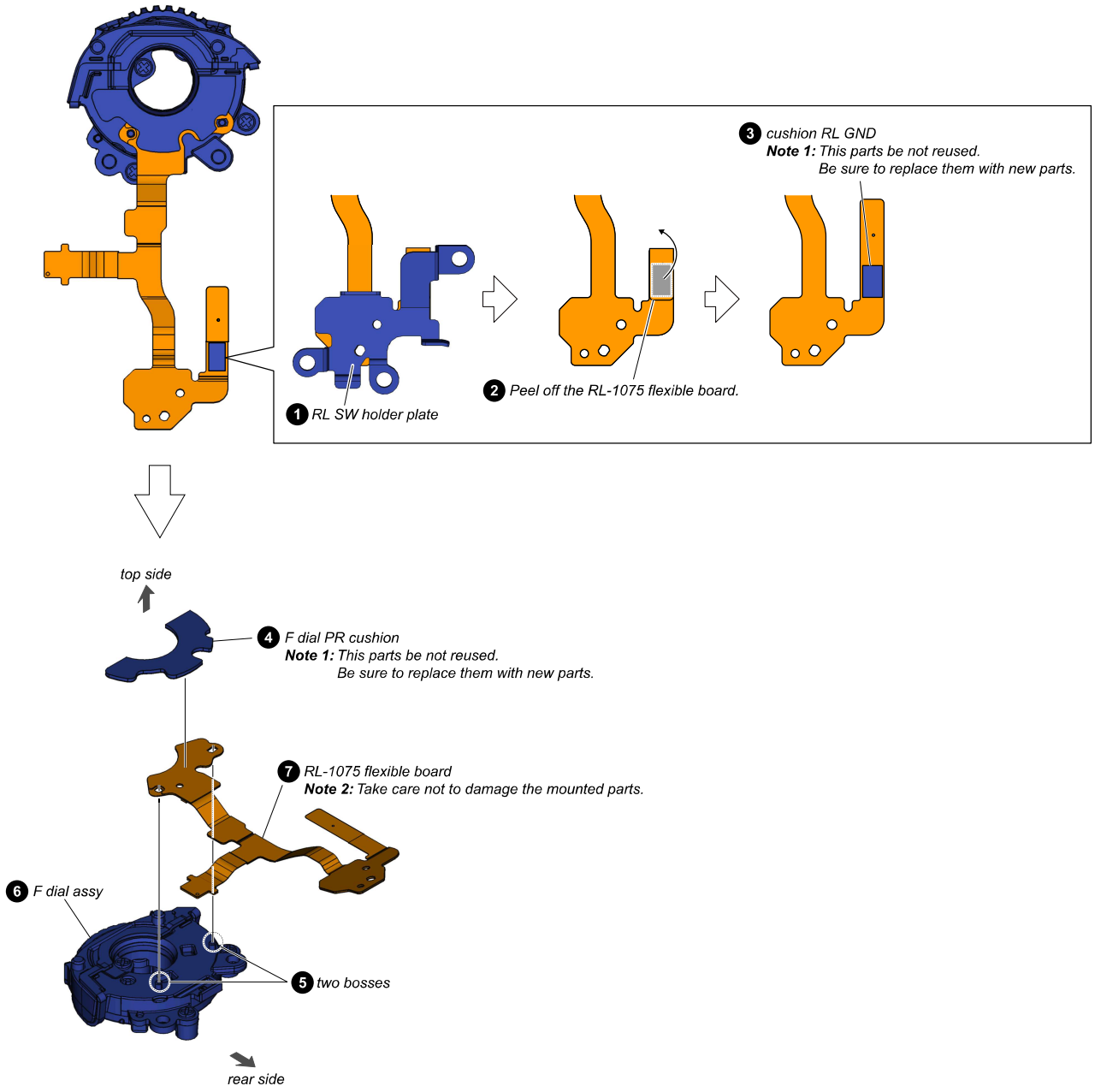

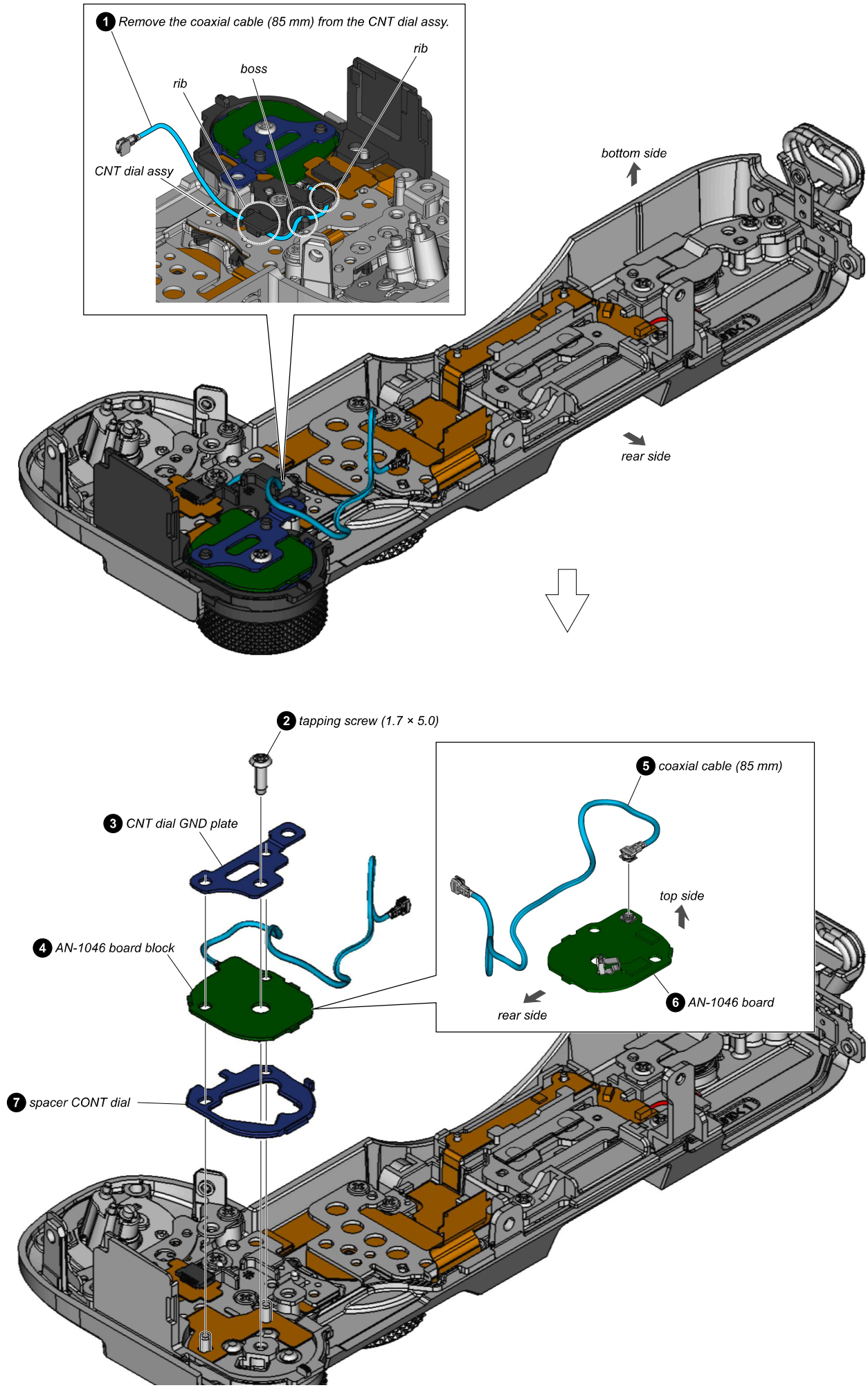
1 Remove the coaxial cable (85 mm) from the CNT dial assy.
rib
boss
rib
CNT dial assy
bottom side
rear side
2 tapping screw (1.7 × 5.0)
3 CNT dial GND plate
4 AN-1046 board block
5 coaxial cable (85 mm)
top side
6 AN-1046 board
rear side
7 spacer CONT dial

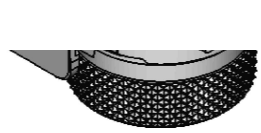

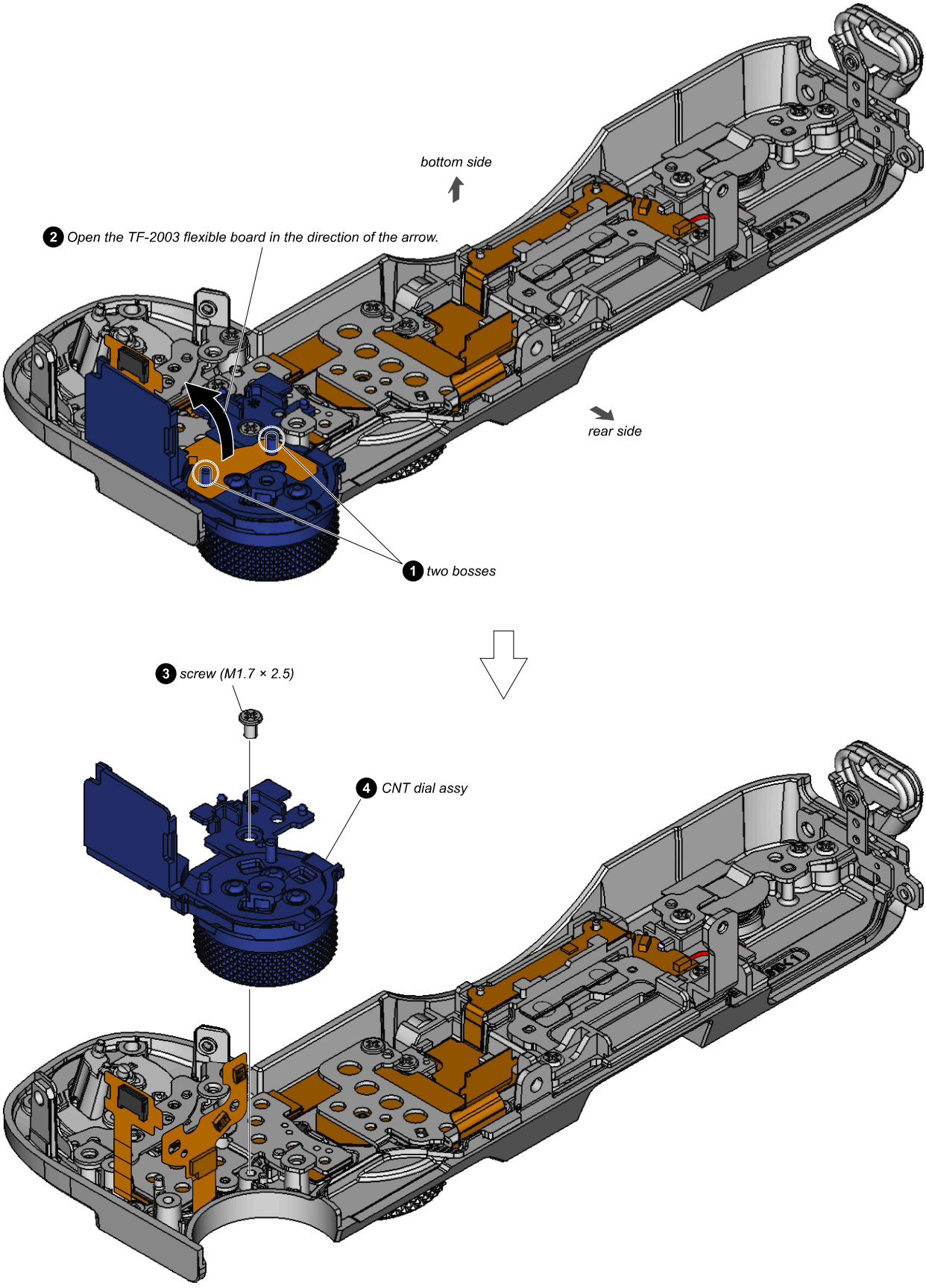
bottom side
2 Open the TF-2003 flexible board in the direction of the arrow.
rear side
1 two bosses
3 screw (M1.7 × 2.5)
4 CNT dial assy

29. EYELET BLOCK (TOP CABINET)

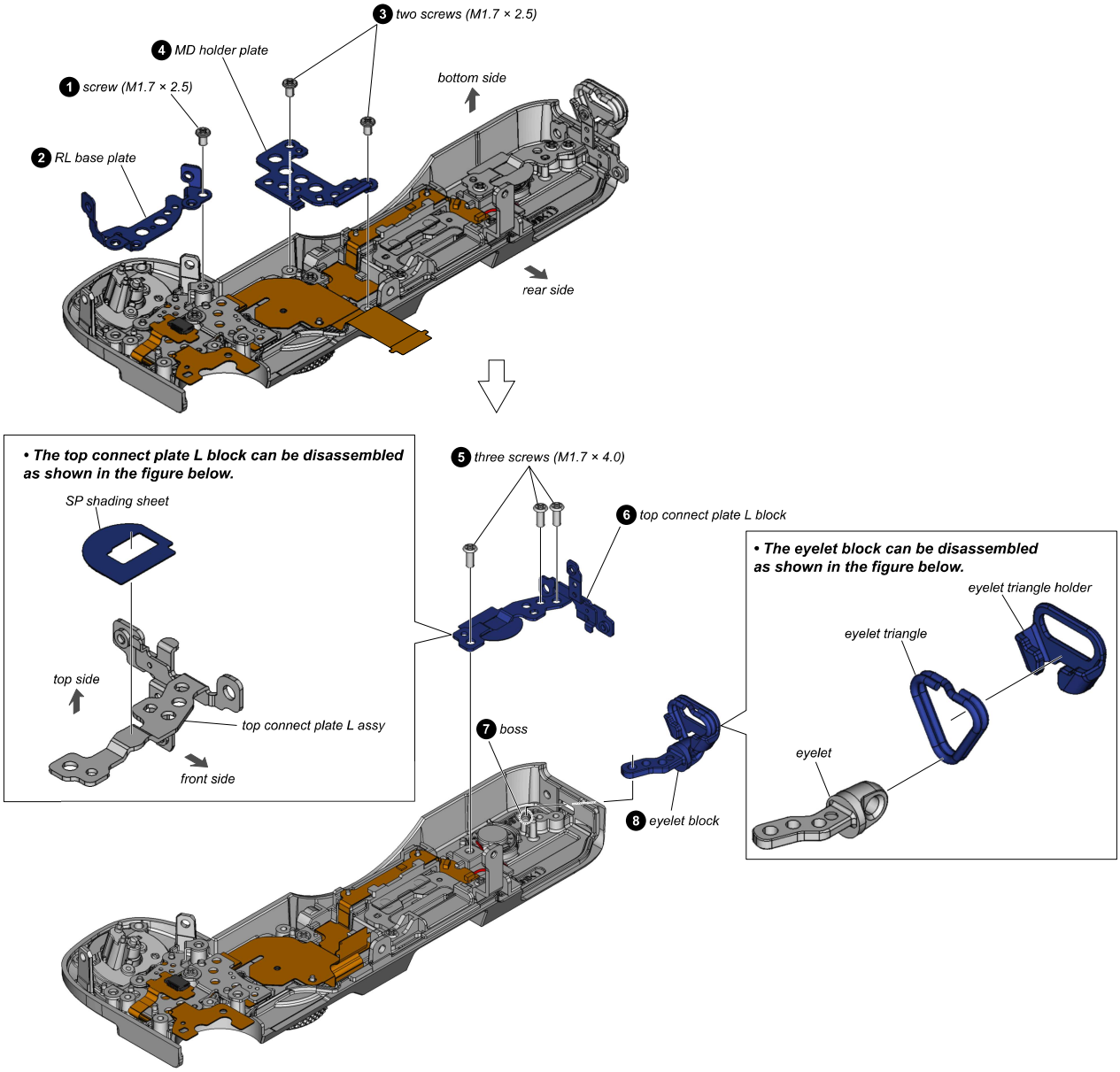

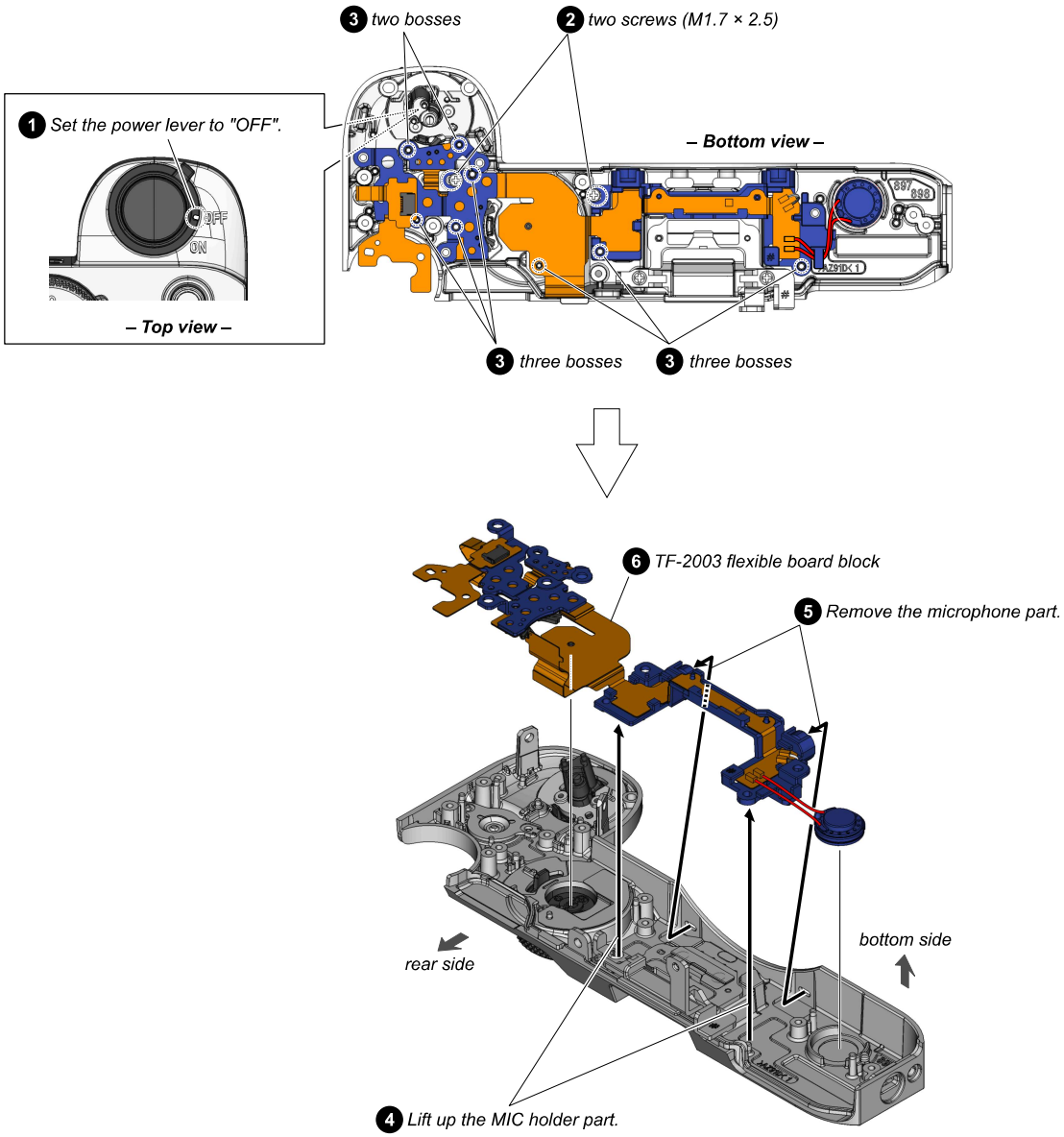
3 two bosses
2 two screws (M1.7 × 2.5)
1 Set the power lever to "OFF".
OFF
ON
– Top view –
– Bottom view –
3 three bosses
3 three bosses
6 TF-2003 flexible board block
5 Remove the microphone part.
rear side
bottom side
4 Lift up the MIC holder part.

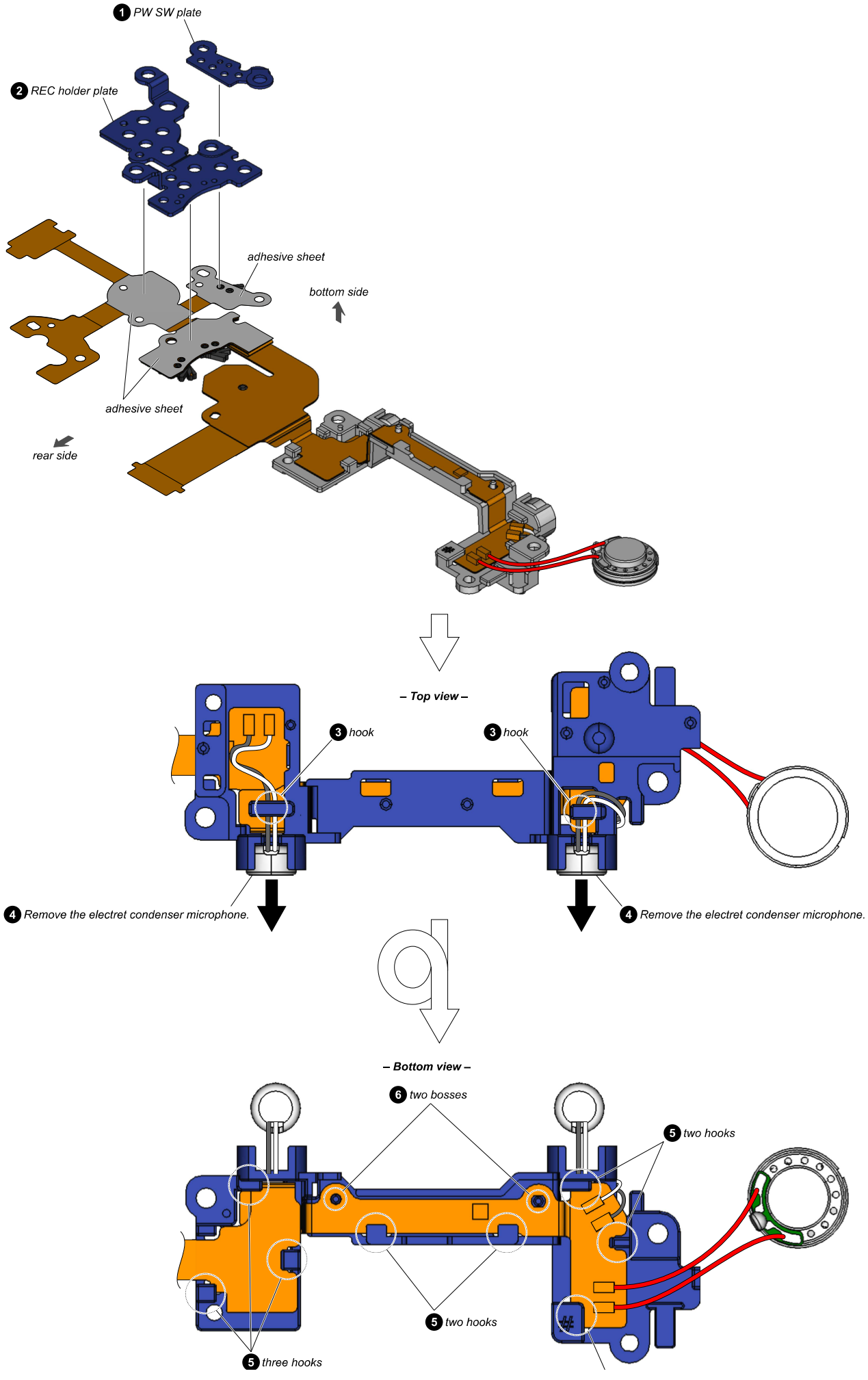
1 PW SW plate
2 REC holder plate
adhesive sheet
bottom side
adhesive sheet
rear side
– Top view –
3 hook
3 hook
4 Remove the electret condenser microphone.
4 Remove the electret condenser microphone.
– Bottom view –
6 two bosses
5 two hooks
5 two hooks
5 three hooks

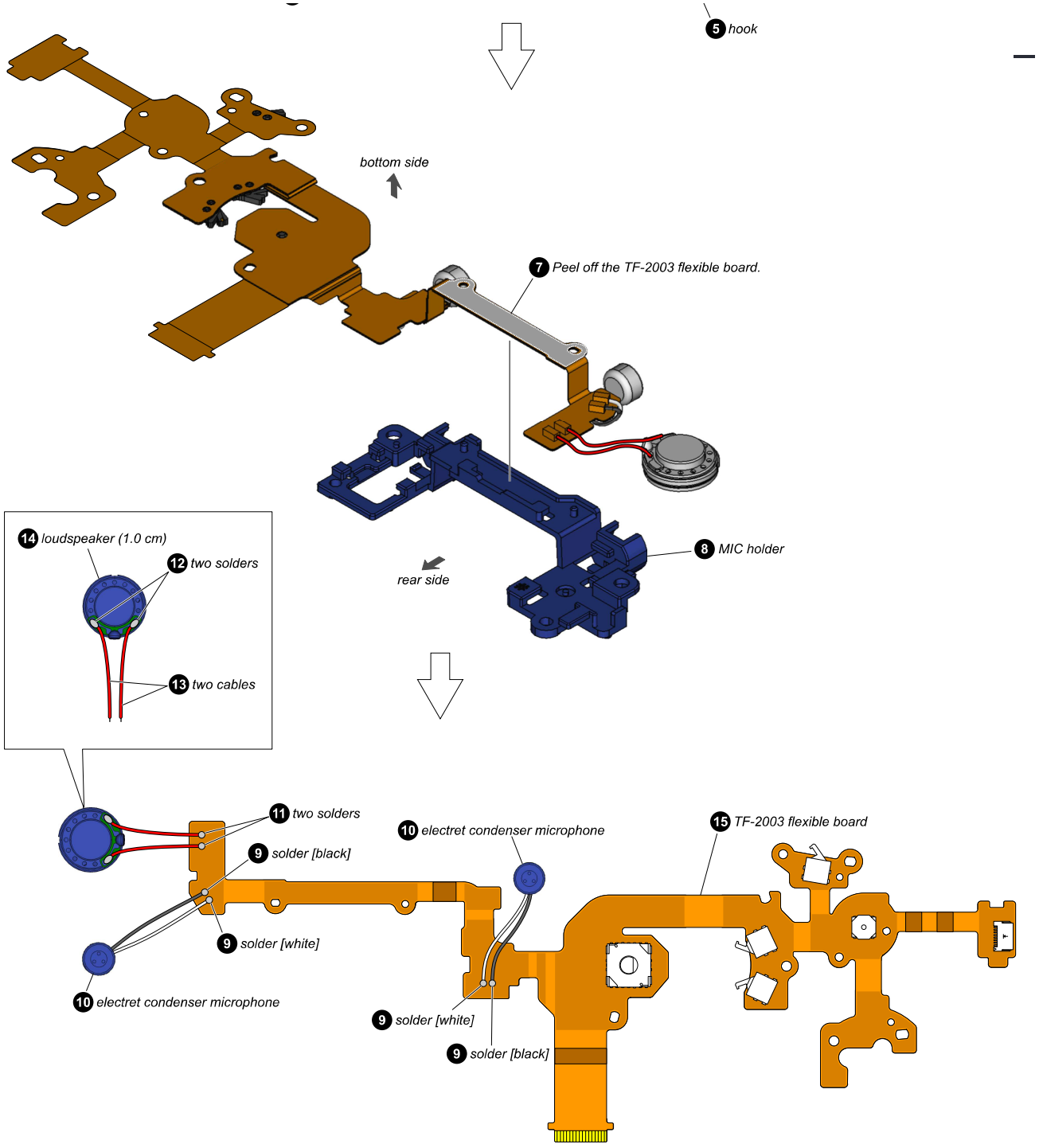
5 hook
bottom side
7 Peel off the TF-2003 flexible board.
8 MIC holder
rear side
14 loudspeaker (1.0 cm)
12 two solders
13 two cables
11 two solders
9 solder [black]
9 solder [white]
10 electret condenser microphone
10 electret condenser microphone
9 solder [white]
9 solder [black]
15 TF-2003 flexible board

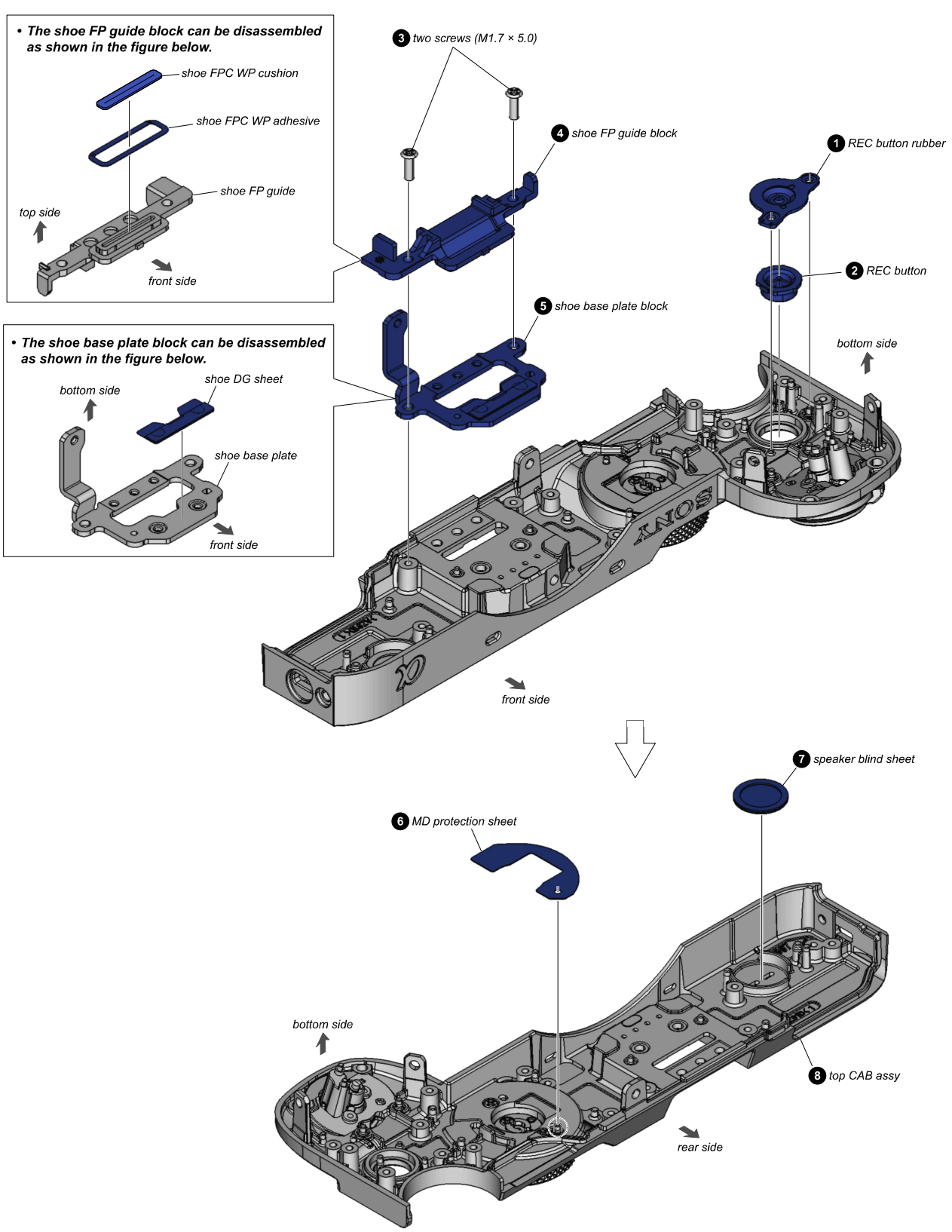
• The shoe FP guide block can be disassembled as shown in the figure below.
shoe FPC WP cushion
shoe FPC WP adhesive
shoe FP guide
top side
front side
• The shoe base plate block can be disassembled as shown in the figure below.
bottom side
shoe DG sheet
shoe base plate
front side
3 two screws (M1.7 × 5.0)
4 shoe FP guide block
1 REC button rubber
2 REC button
5 shoe base plate block
bottom side
front side
7 speaker blind sheet
6 MD protection sheet
bottom side
8 top CAB assy
rear side

33. EVF BLOCK

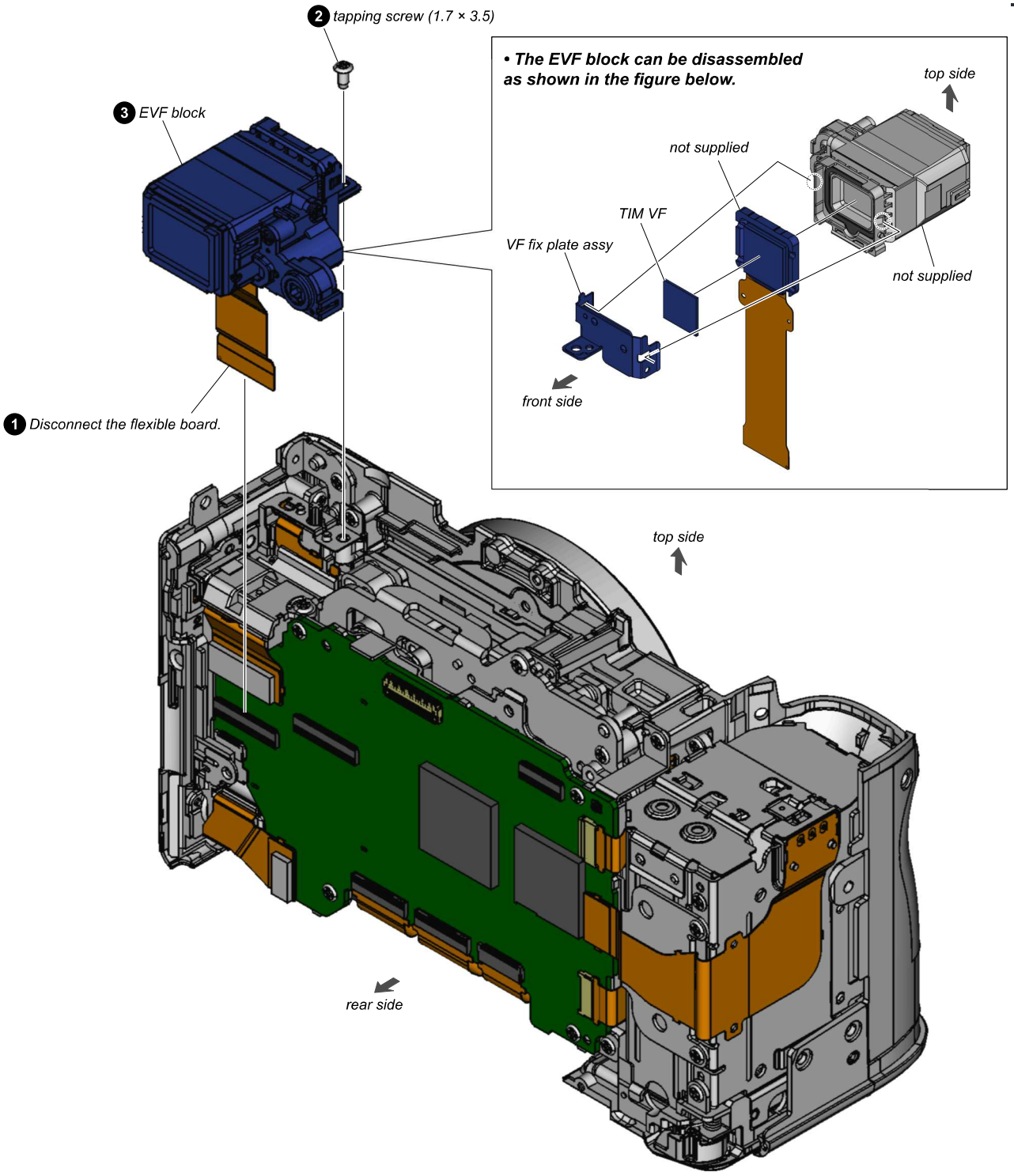
2 tapping screw (1.7 × 3.5)
3 EVF block
1 Disconnect the flexible board.
• The EVF block can be disassembled as shown in the figure below.
top side
not supplied
TIM VF
VF fix plate assy
not supplied
front side
top side
rear side

34. JK CABINET BLOCK

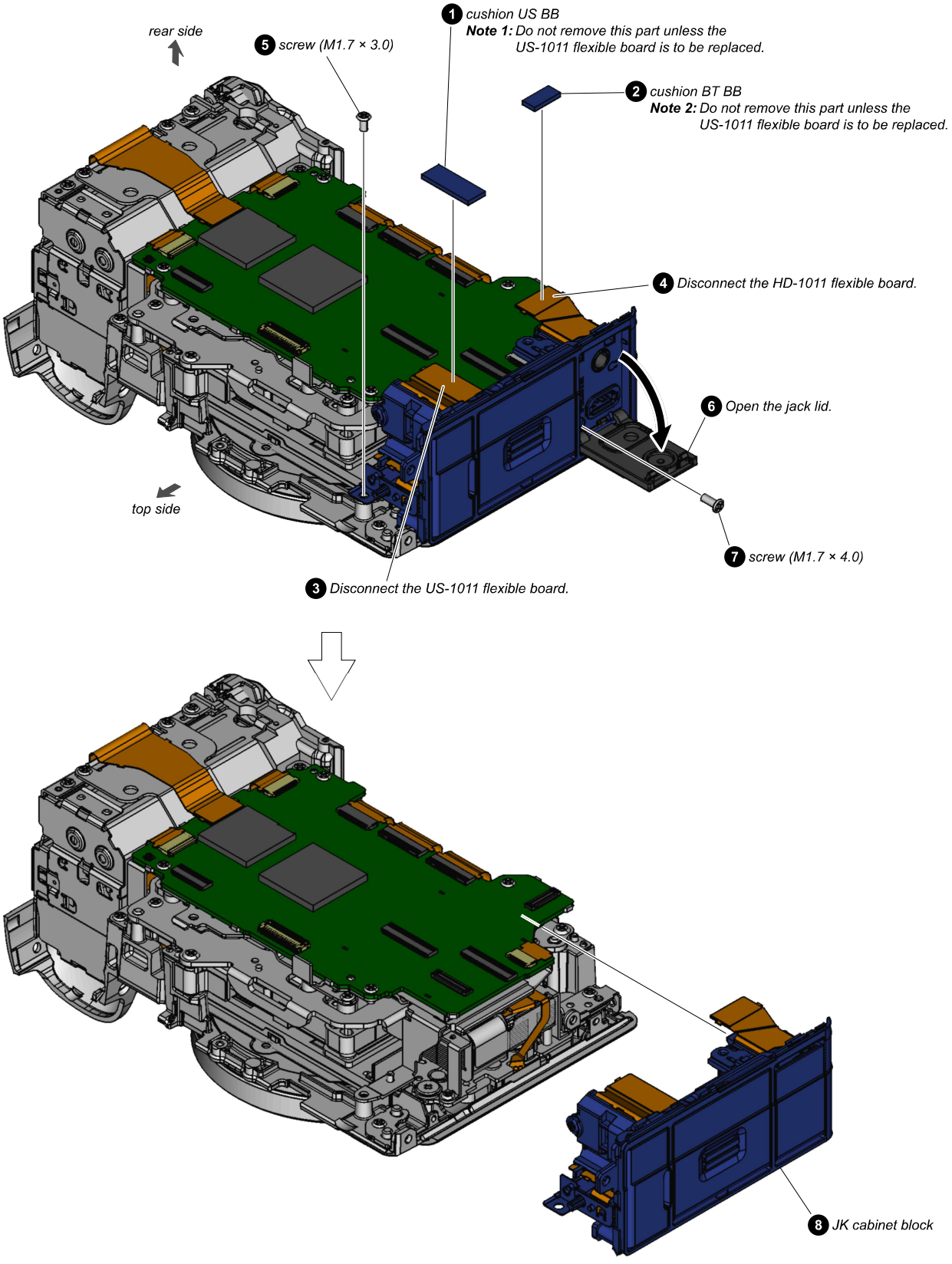

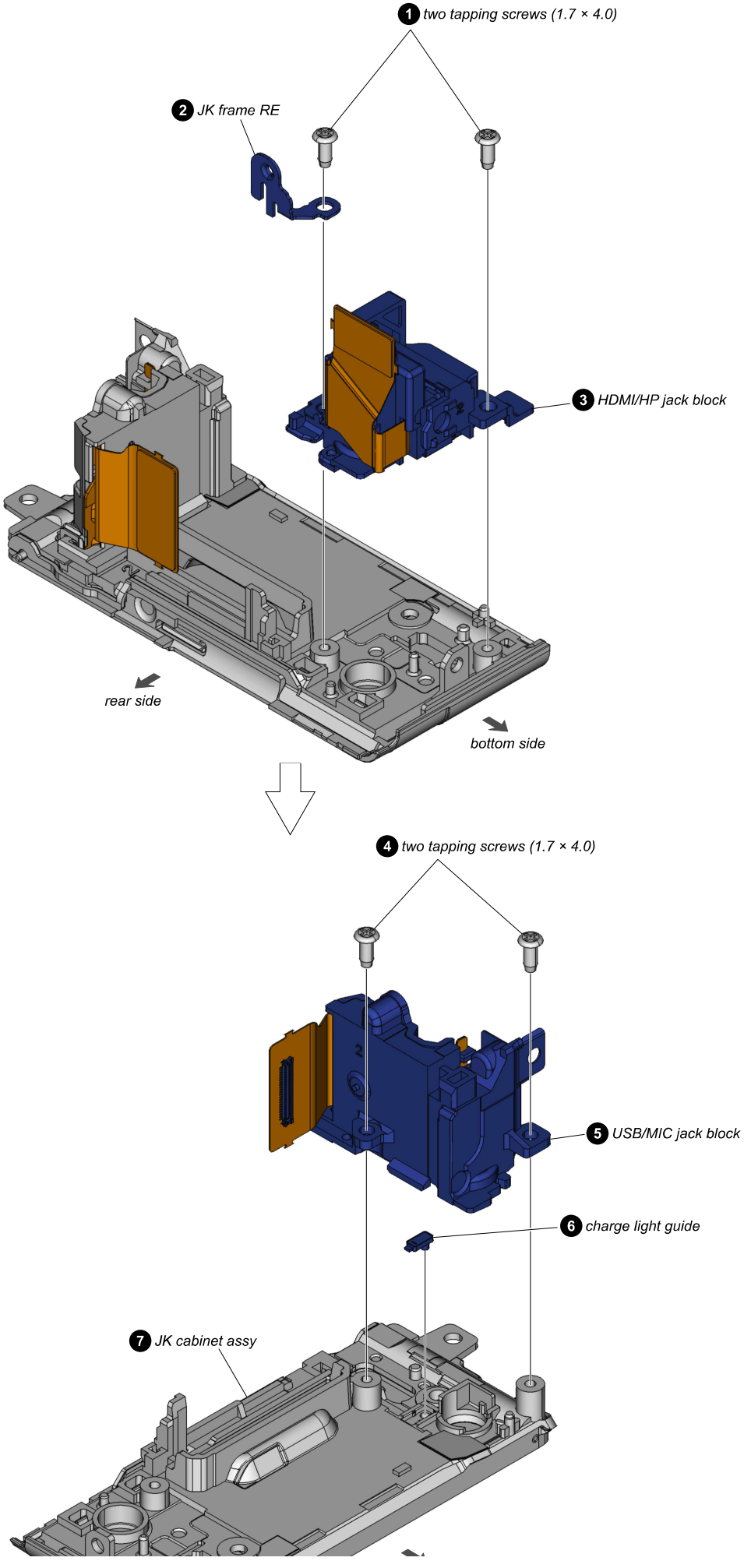
1 two tapping screws (1.7 × 4.0)
2 JK frame RE
3 HDMI/HP jack block
rear side
bottom side
4 two tapping screws (1.7 × 4.0)
5 USB/MIC jack block
6 charge light guide
7 JK cabinet assy

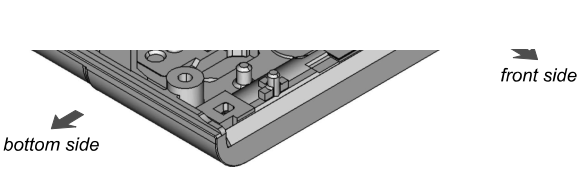
front side
bottom side

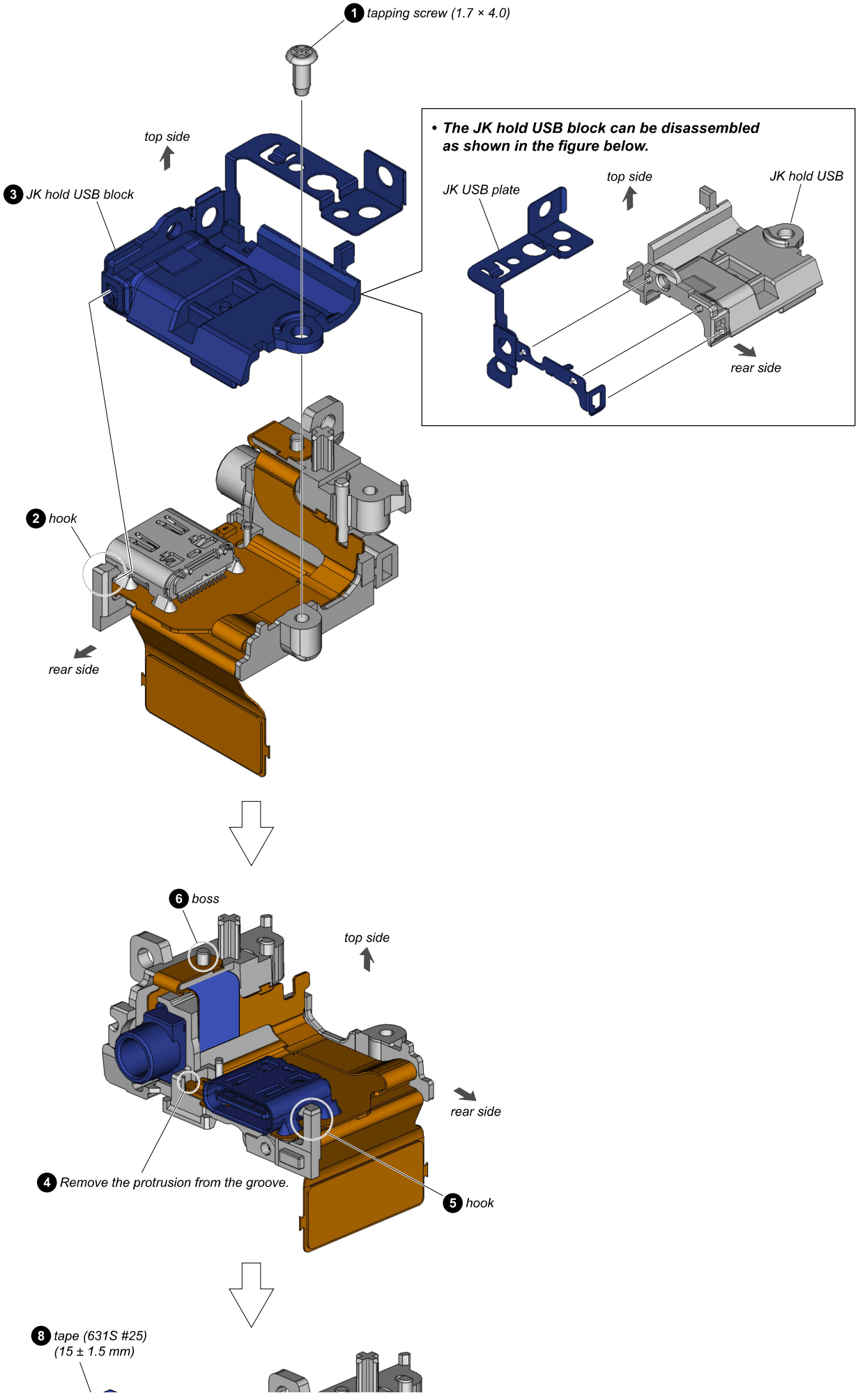
1 tapping screw (1.7 × 4.0)
top side
3 JK hold USB block
• The JK hold USB block can be disassembled as shown in the figure below.
JK USB plate
top side
JK hold USB
rear side
2 hook
rear side
6 boss
top side
rear side
4 Remove the protrusion from the groove.
5 hook
8 tape (631S #25)
(15 ± 1.5 mm)

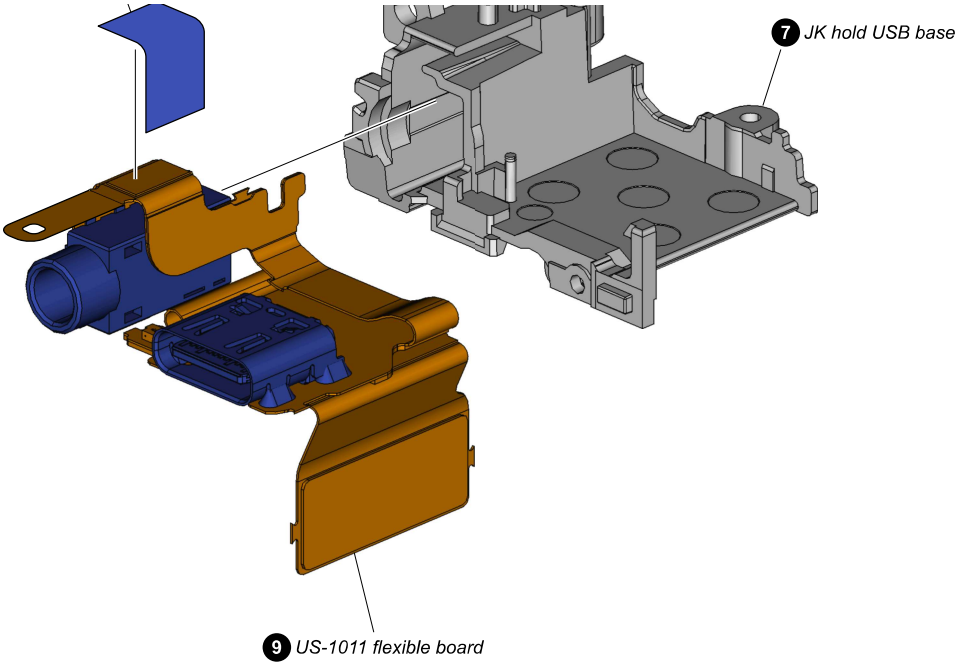
7 JK hold USB base
9 US-1011 flexible board

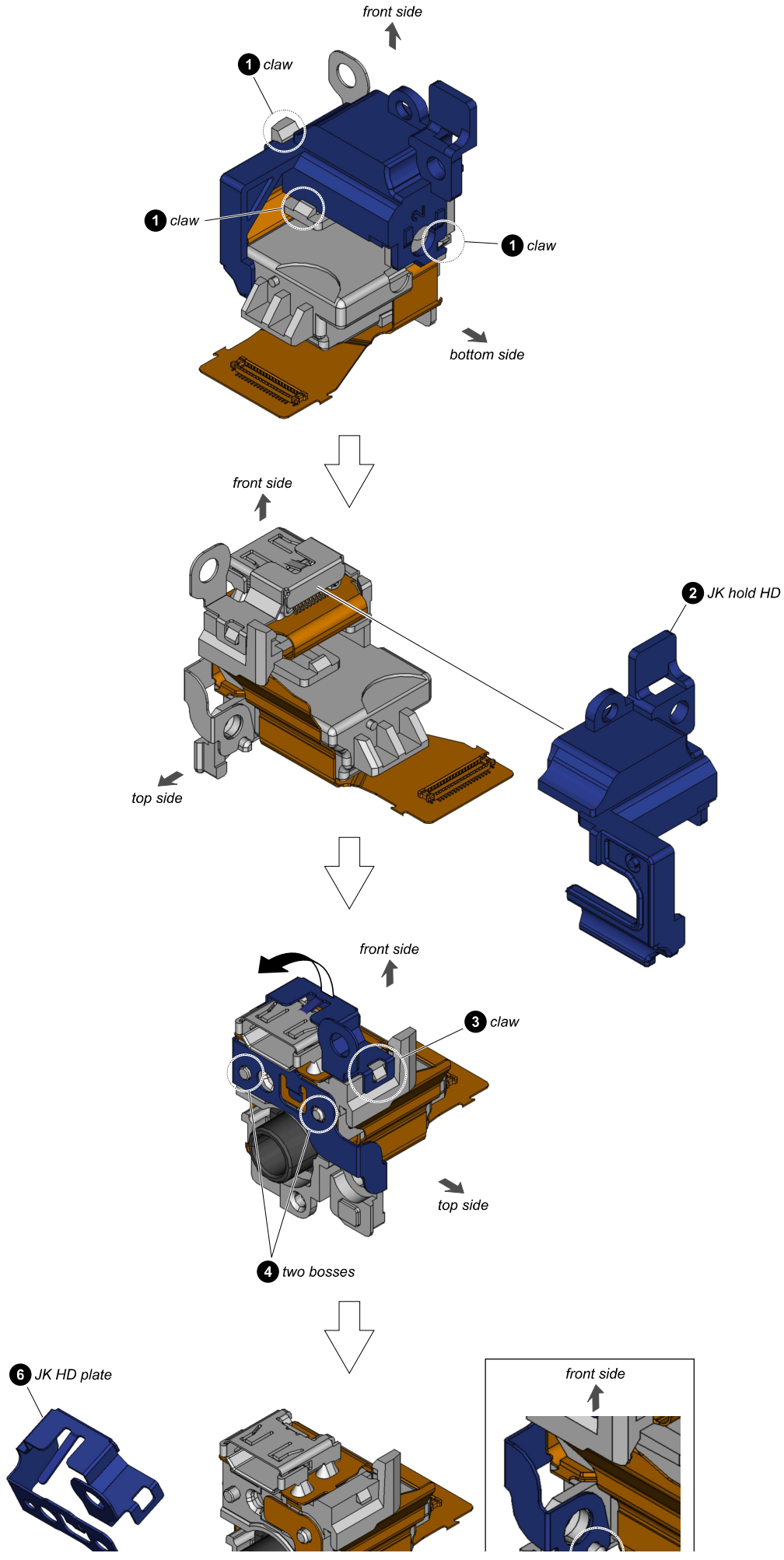
front side
1 claw
1 claw
1 claw
bottom side
front side
2 JK hold HD
top side
front side
3 claw
top side
4 two bosses
6 JK HD plate
front side

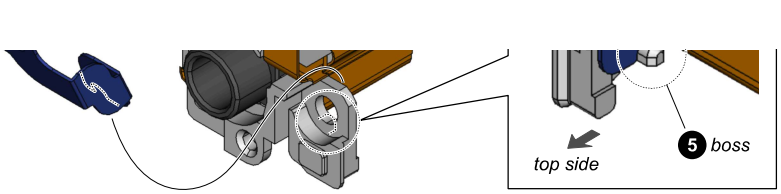
top side
5 boss

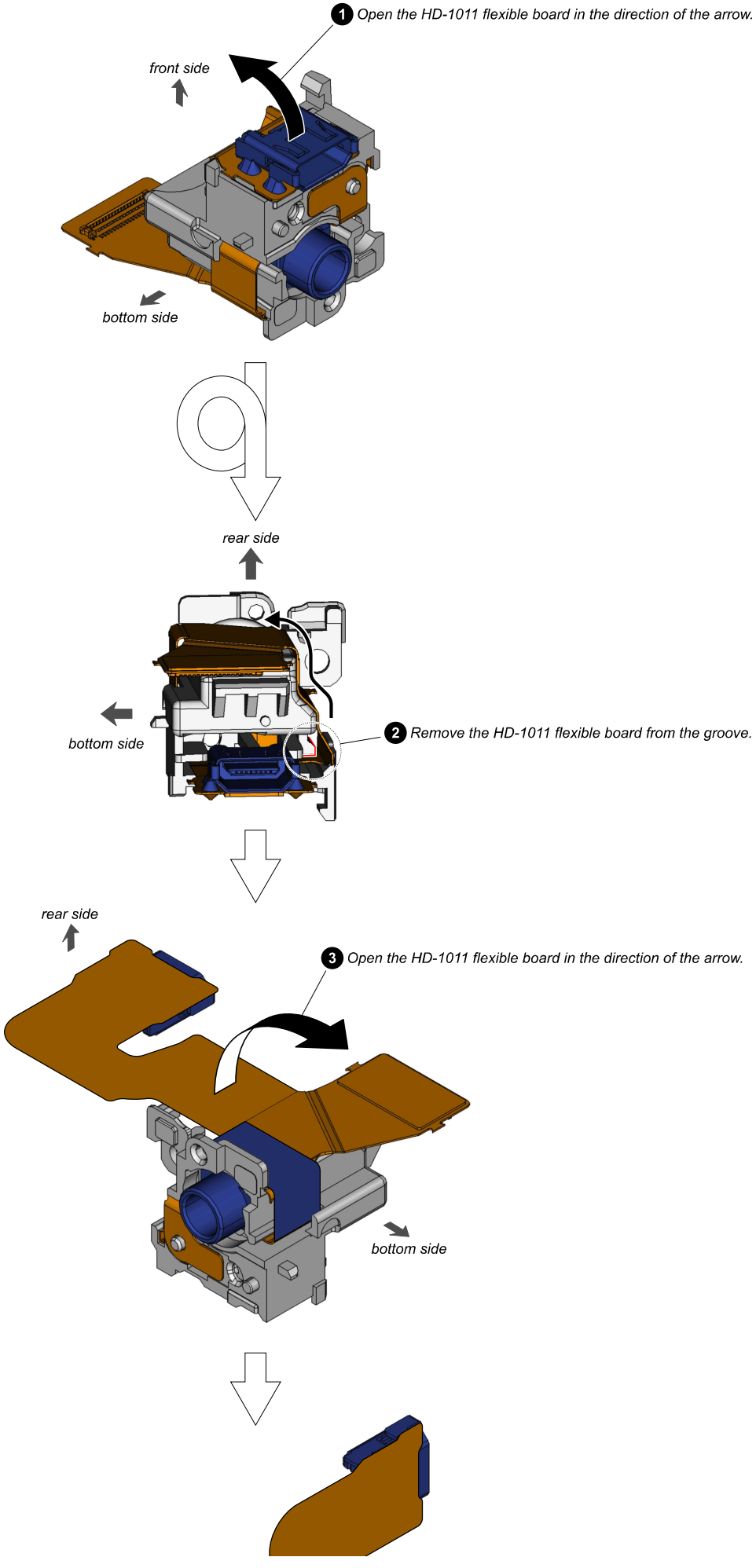
1 Open the HD-1011 flexible board in the direction of the arrow.
front side
bottom side
rear side
bottom side
2 Remove the HD-1011 flexible board from the groove.
rear side
3 Open the HD-1011 flexible board in the direction of the arrow.
bottom side

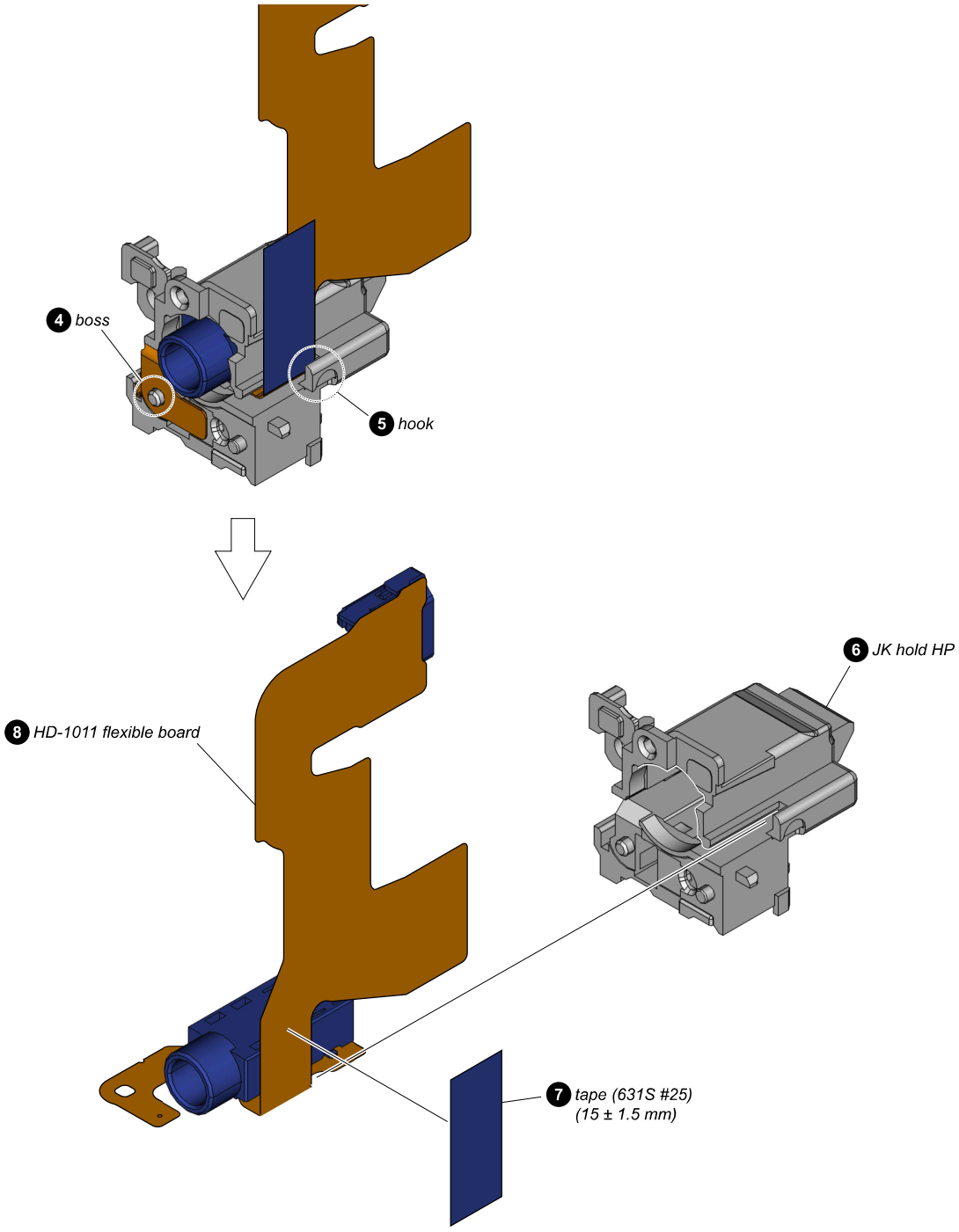
4 boss
5 hook
6 JK hold HP
8 HD-1011 flexible board
7 tape (631S #25)
(15 ± 1.5 mm)

39. SY-1132 BOARD (not supplied)

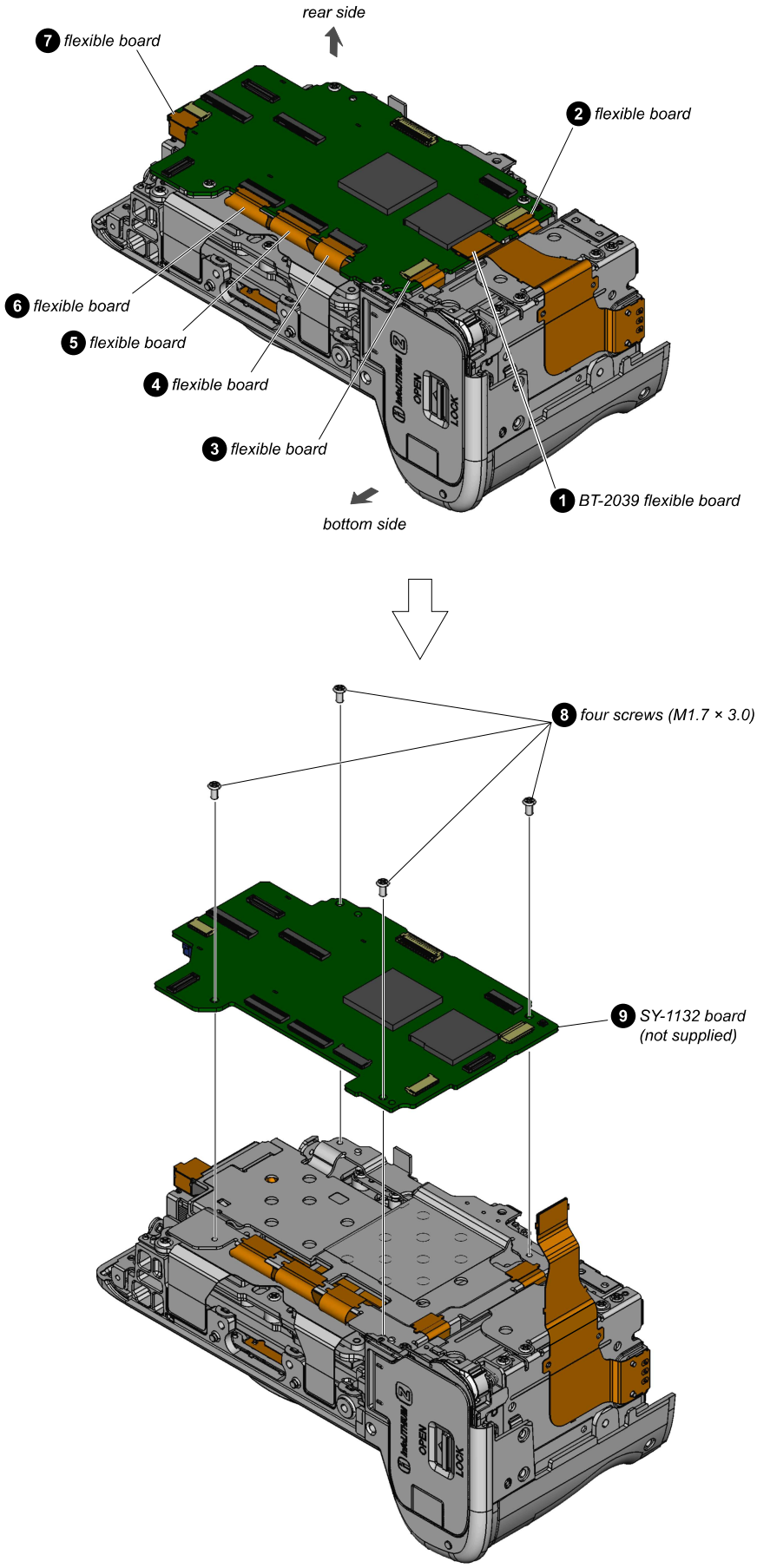

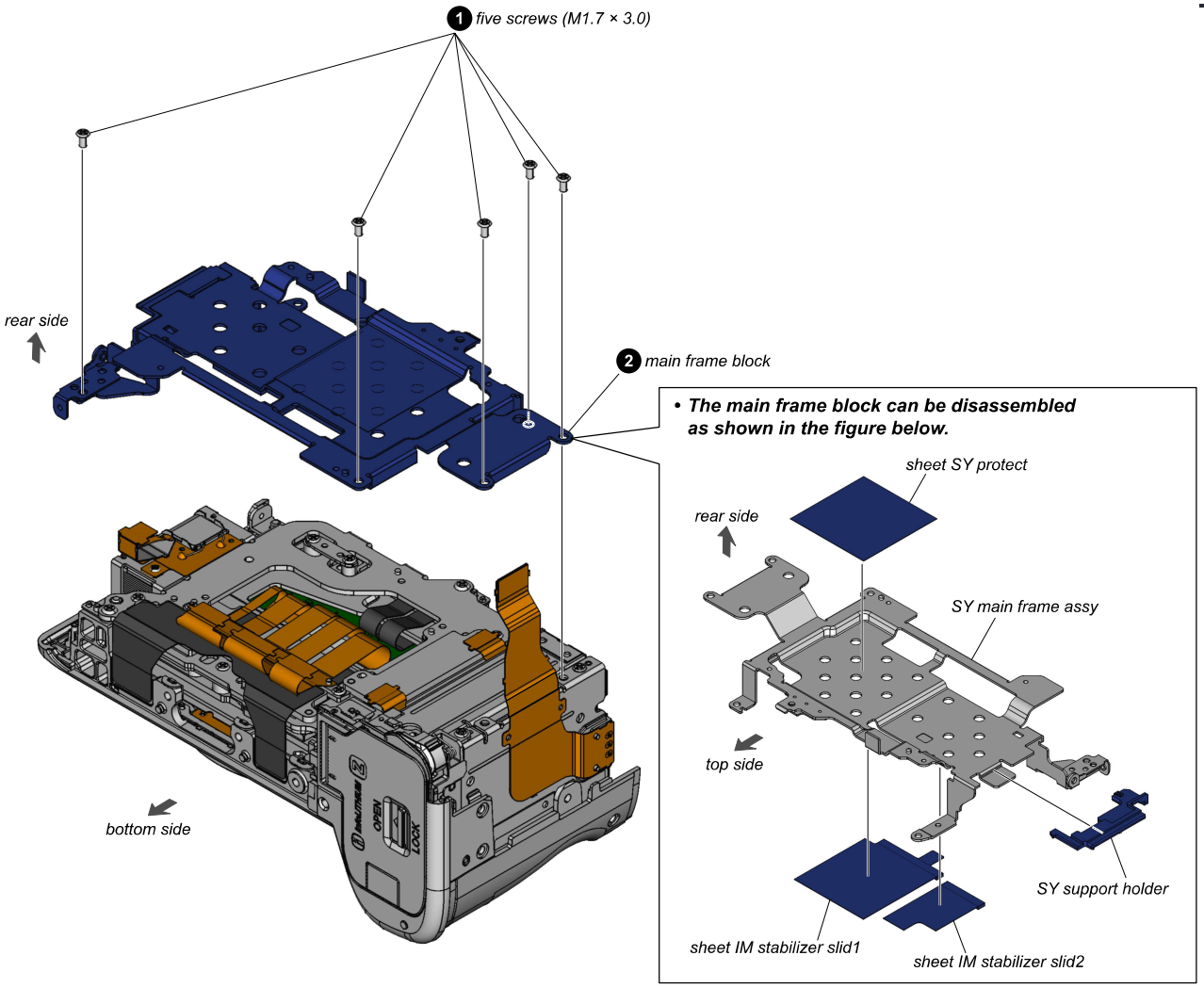
1 five screws (M1.7 × 3.0)
rear side
2 main frame block
bottom side
• The main frame block can be disassembled as shown in the figure below.
sheet SY protect
rear side
SY main frame assy
top side
SY support holder
sheet IM stabilizer slid1
sheet IM stabilizer slid2

41. BT HOLDER BLOCK

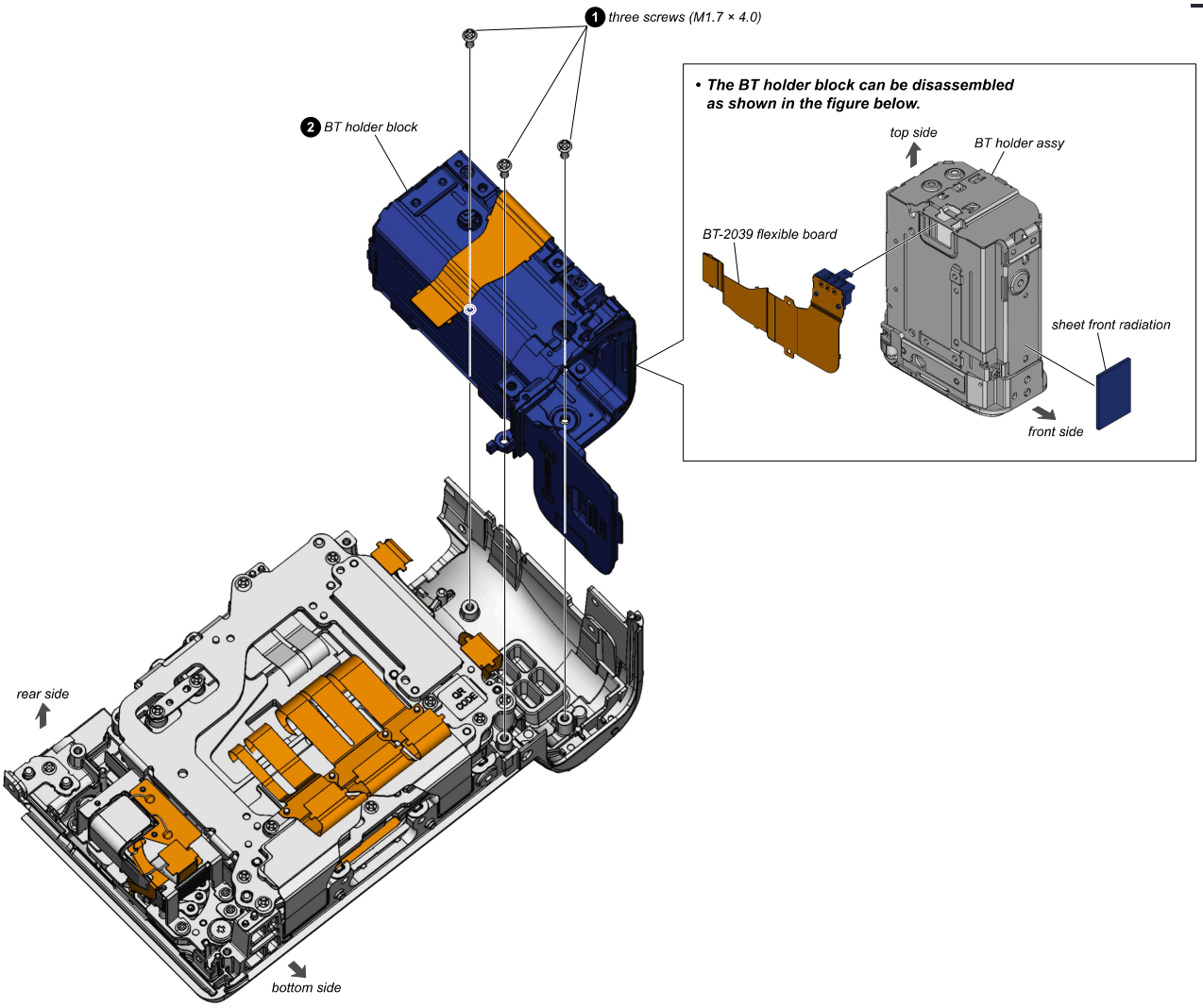

 © 2024.04

ASSEMBLY

OPERATION NOTES

Make sure that the conductive side of a flexible board does not have any stain or foreign materials.

Do not touch the conductive side of flexible boards with bare hands.

Plug in a flexible board straight, fully into the connector until it reaches the end inside. (Fig. 1, Fig. 2, Fig. 3)

OK (The flexible board was plugged in straight and completely)	NG (The flexible board was plugged in crooked)	NG (The flexible board was not plugged in completely)

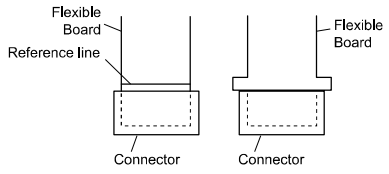

Fig. 1

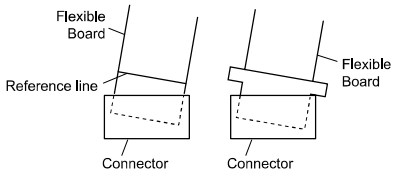

Fig. 2

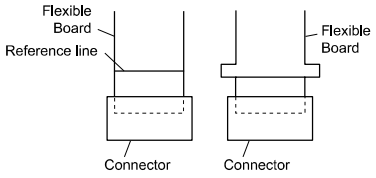

Fig. 3

When closing the connector's holder, press it evenly while pushing a flexible board in direction B.

Type 1

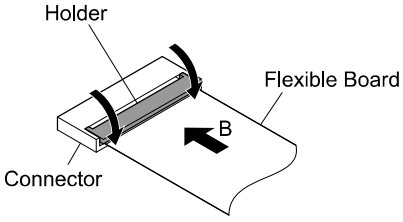

Type 2

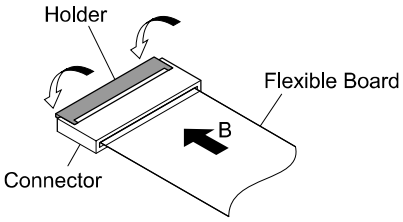

When installing the connector (without holder), plug in a flexible board straight until it stops.

Type 3

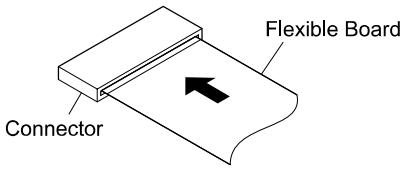

Plugged in straight and completely.

- Make sure that the flat cable and flexible board are not cracked or bent at the contact end.
- If the terminal is cracked or came off, replace it.

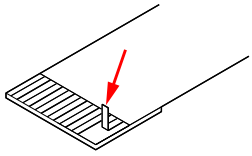

- Do not apply excessive force to the gilded flexible board.
- The proper way to disconnect a connector is to grab the connector instead of the wires. If you pull on the wires, they might be broken.

SERVICE TOOLS

Display	Use	Part No.
ADHESIVE (243)	ADHESIVE (243) 50ML BLU	760004201

ASSEMBLY FLOW

This set can be assembled in the order shown below.

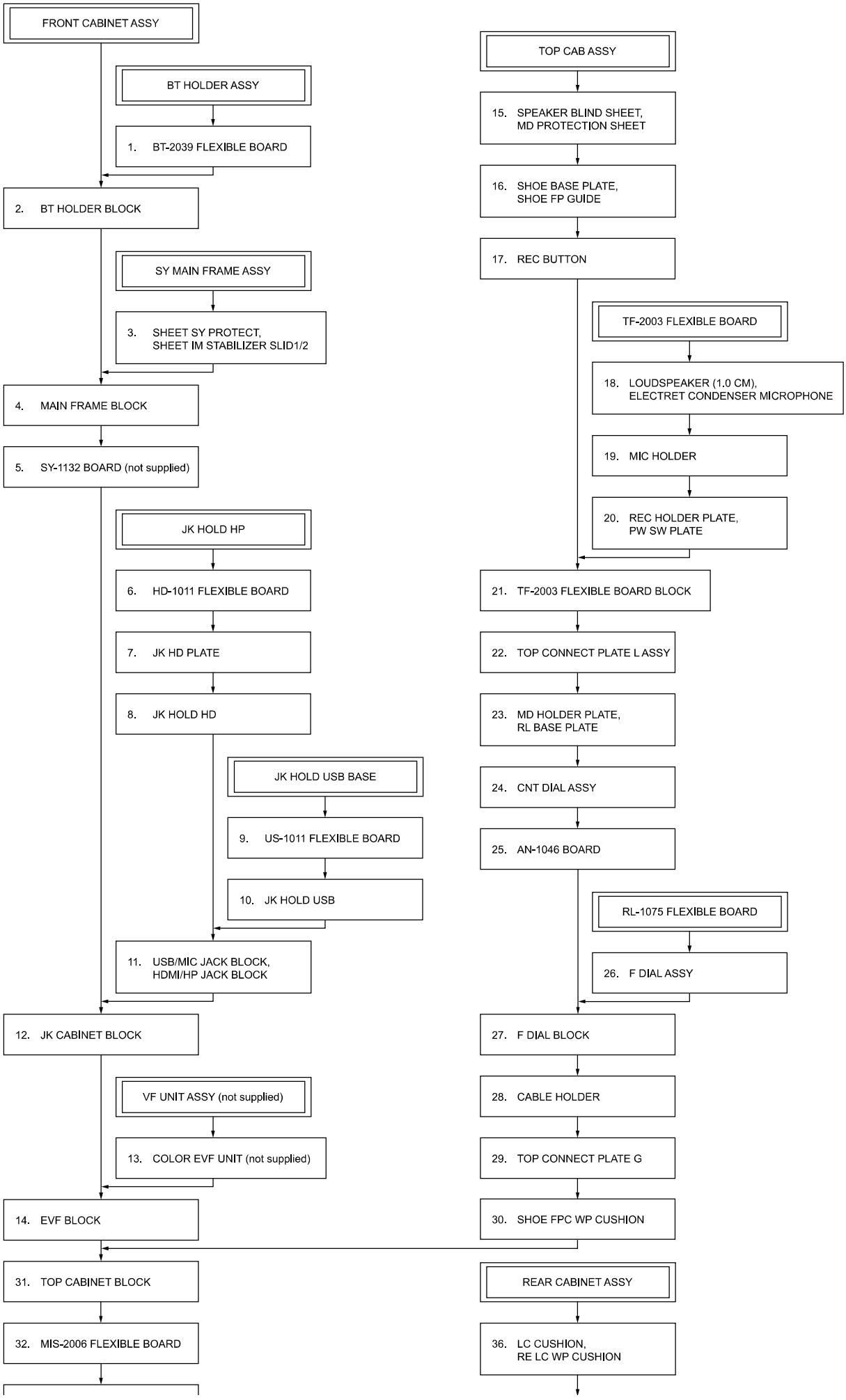
FRONT CABINET ASSY
BT HOLDER ASSY
1. BT-2039 FLEXIBLE BOARD
2. BT HOLDER BLOCK
SY MAIN FRAME ASSY
3. SHEET SY PROTECT, SHEET IM STABILIZER SLID1/2
4. MAIN FRAME BLOCK
5. SY-1132 BOARD (not supplied)
JK HOLD HP
6. HD-1011 FLEXIBLE BOARD
7. JK HD PLATE
8. JK HOLD HD
JK HOLD USB BASE
9. US-1011 FLEXIBLE BOARD
10. JK HOLD USB
11. USB/MIC JACK BLOCK, HDMI/HP JACK BLOCK
12. JK CABINET BLOCK
VF UNIT ASSY (not supplied)
13. COLOR EVF UNIT (not supplied)
14. EVF BLOCK
31. TOP CABINET BLOCK
32. MIS-2006 FLEXIBLE BOARD
TOP CAB ASSY
15. SPEAKER BLIND SHEET, MD PROTECTION SHEET
16. SHOE BASE PLATE, SHOE FP GUIDE
17. REC BUTTON
TF-2003 FLEXIBLE BOARD
18. LOUDSPEAKER (1.0 CM), ELECTRET CONDENSER MICROPHONE
19. MIC HOLDER
20. REC HOLDER PLATE, PW SW PLATE
21. TF-2003 FLEXIBLE BOARD BLOCK
22. TOP CONNECT PLATE L ASSY
23. MD HOLDER PLATE, RL BASE PLATE
24. CNT DIAL ASSY
25. AN-1046 BOARD
RL-1075 FLEXIBLE BOARD
26. F DIAL ASSY
27. F DIAL BLOCK
28. CABLE HOLDER
29. TOP CONNECT PLATE G
30. SHOE FPC WP CUSHION
REAR CABINET ASSY
36. LC CUSHION, RE LC WP CUSHION

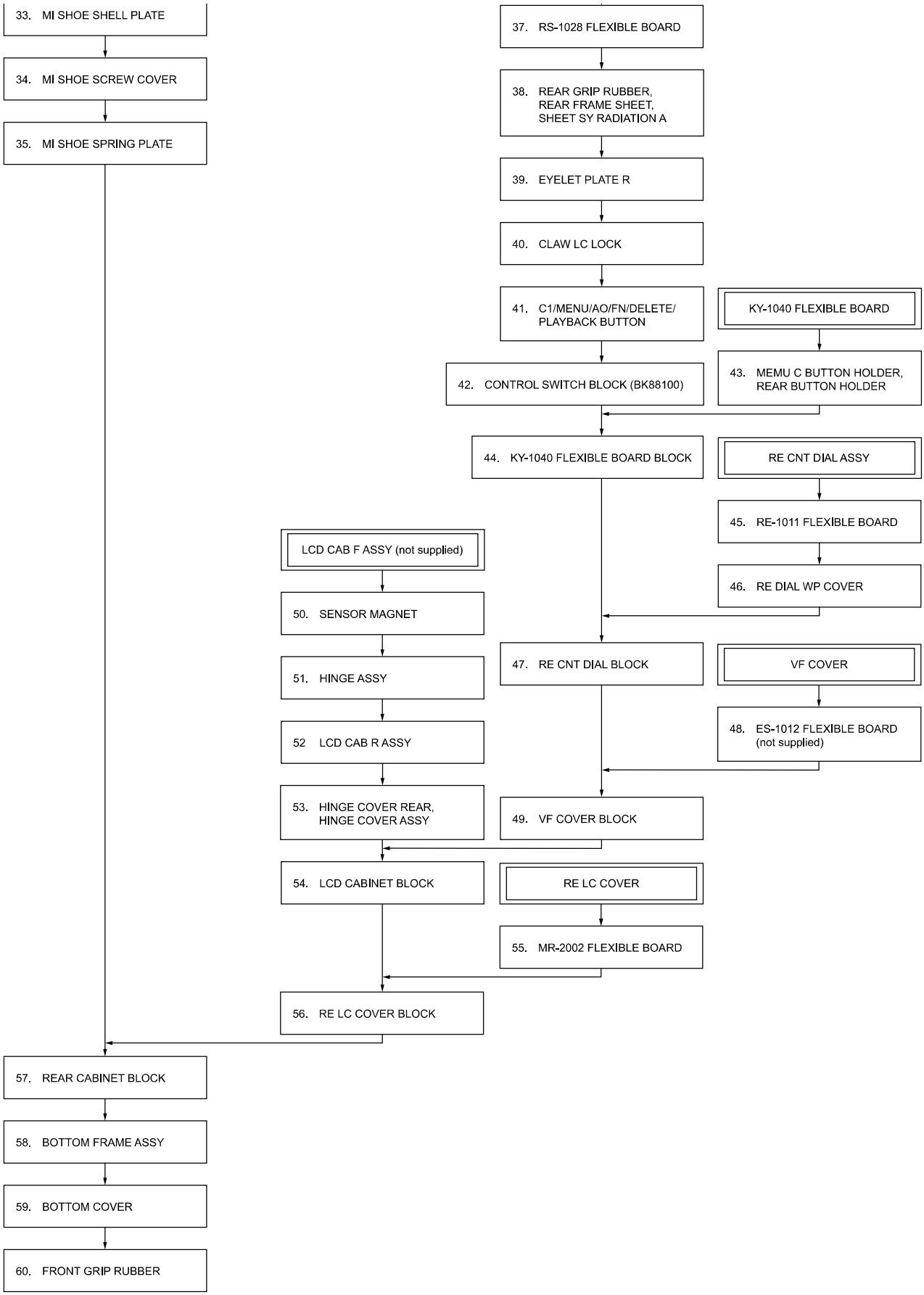
33. MI SHOE SHELL PLATE
34. MI SHOE SCREW COVER
35. MI SHOE SPRING PLATE
37. RS-1028 FLEXIBLE BOARD
38. REAR GRIP RUBBER, REAR FRAME SHEET, SHEET SY RADIATION A
39. EYELET PLATE R
40. CLAW LC LOCK
41. C1/MENU/AO/FN/DELETE/ PLAYBACK BUTTON
KY-1040 FLEXIBLE BOARD
42. CONTROL SWITCH BLOCK (BK88100)
43. MEMU C BUTTON HOLDER, REAR BUTTON HOLDER
44. KY-1040 FLEXIBLE BOARD BLOCK
RE CNT DIAL ASSY
45. RE-1011 FLEXIBLE BOARD
LCD CAB F ASSY (not supplied)
46. RE DIAL WP COVER
50. SENSOR MAGNET
47. RE CNT DIAL BLOCK
VF COVER
51. HINGE ASSY
48. ES-1012 FLEXIBLE BOARD (not supplied)
52 LCD CAB R ASSY
53. HINGE COVER REAR, HINGE COVER ASSY
49. VF COVER BLOCK
54. LCD CABINET BLOCK
RE LC COVER
55. MR-2002 FLEXIBLE BOARD
56. RE LC COVER BLOCK
57. REAR CABINET BLOCK
58. BOTTOM FRAME ASSY
59. BOTTOM COVER
60. FRONT GRIP RUBBER

Note: Follow the assembly procedure in the numerical order given.

1. BT-2039 FLEXIBLE BOARD

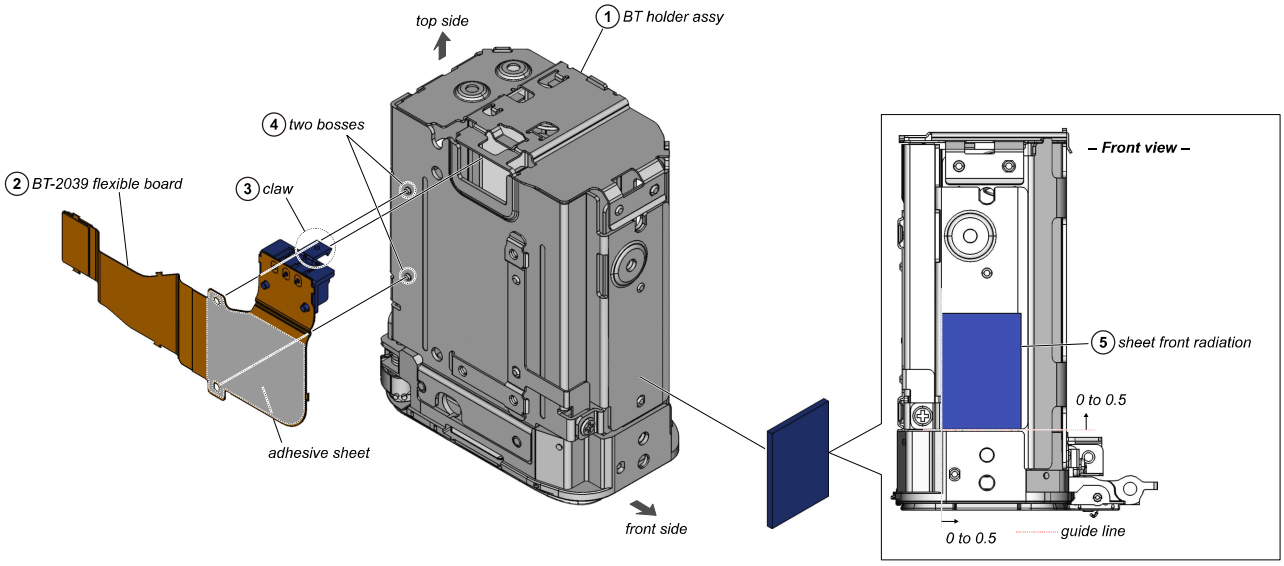

2. BT HOLDER BLOCK

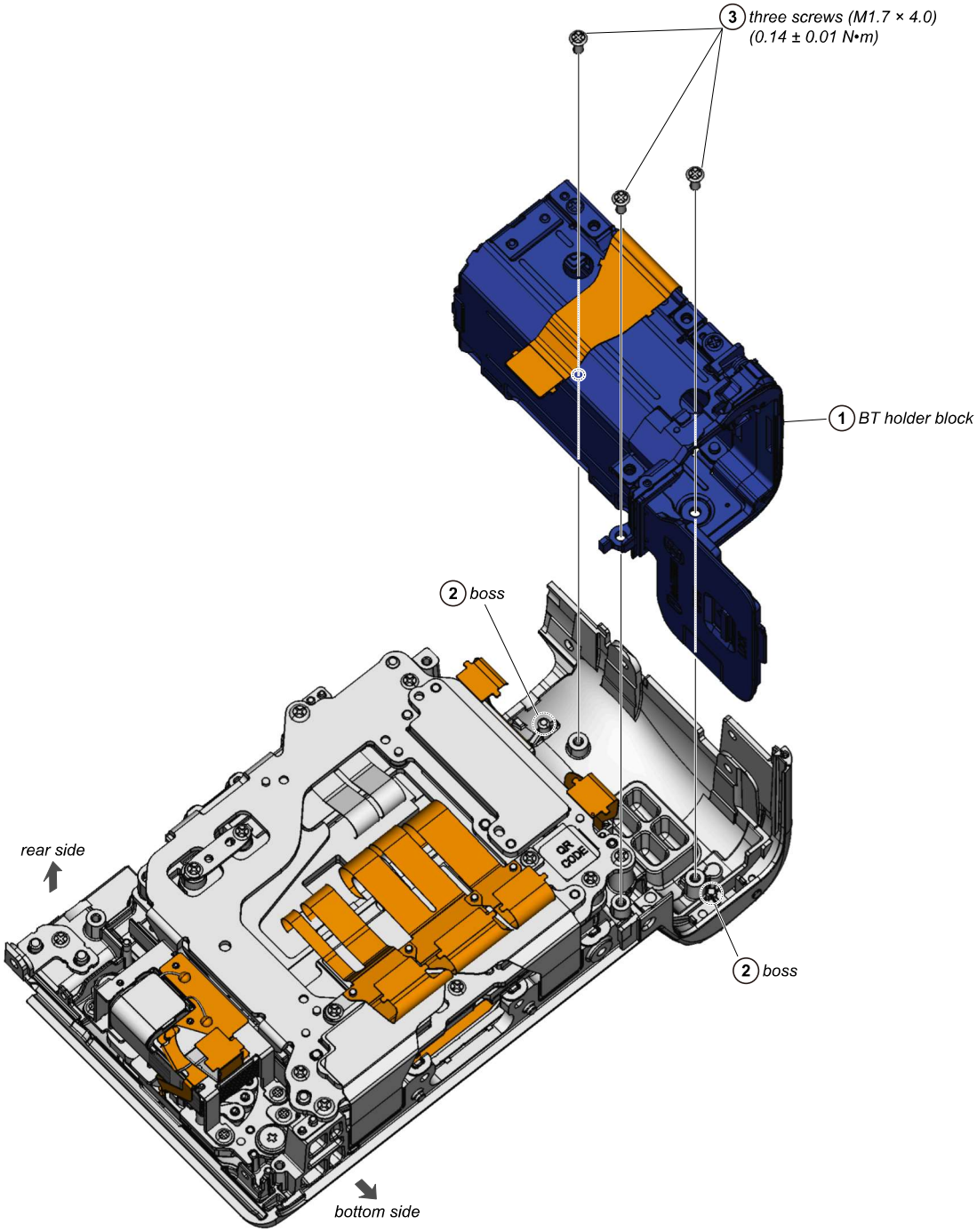

3. SHEET SY PROTECT, SHEET IM STABILIZER SLID1/2

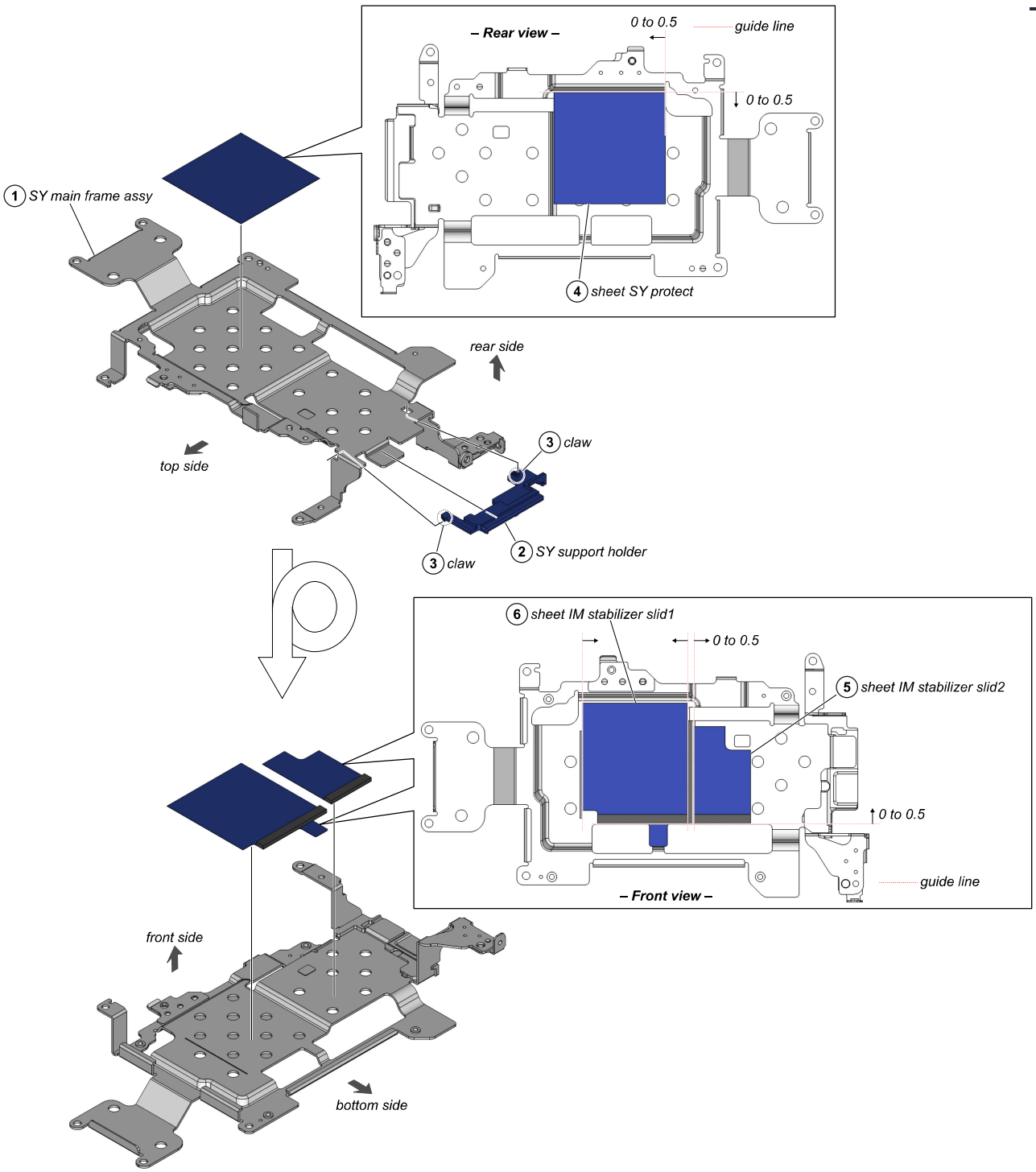

4. MAIN FRAME BLOCK

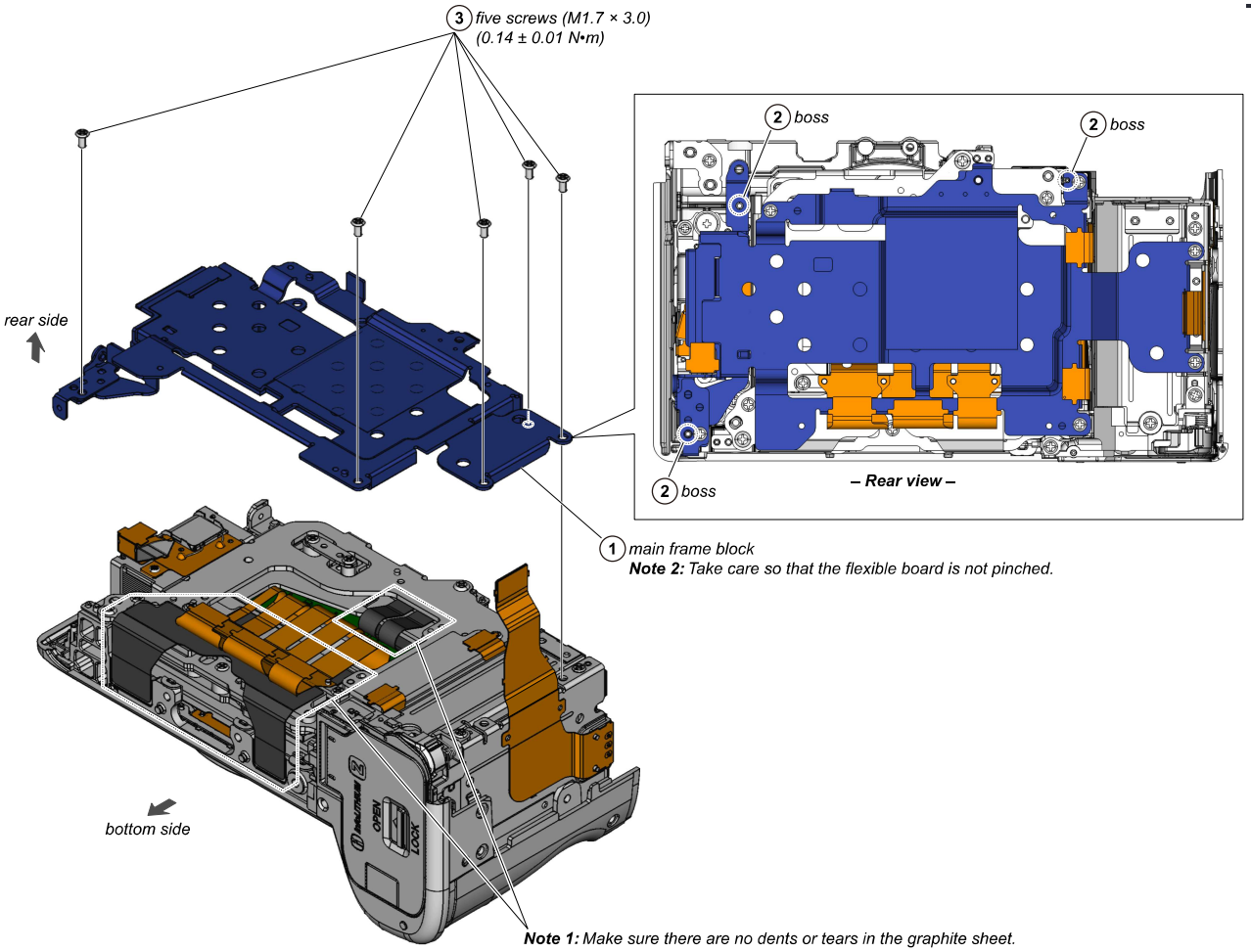

5. SY-1132 BOARD (not supplied)

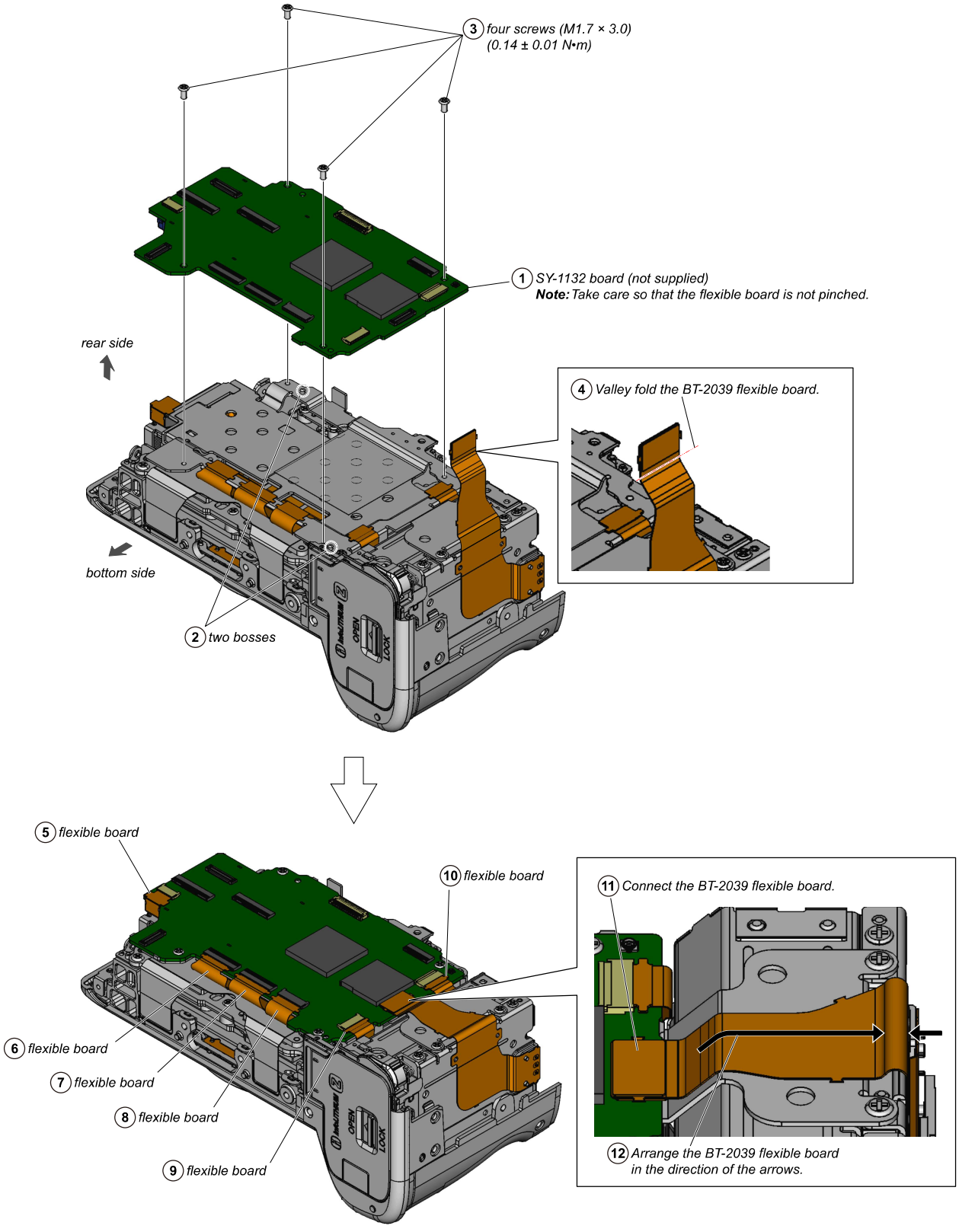

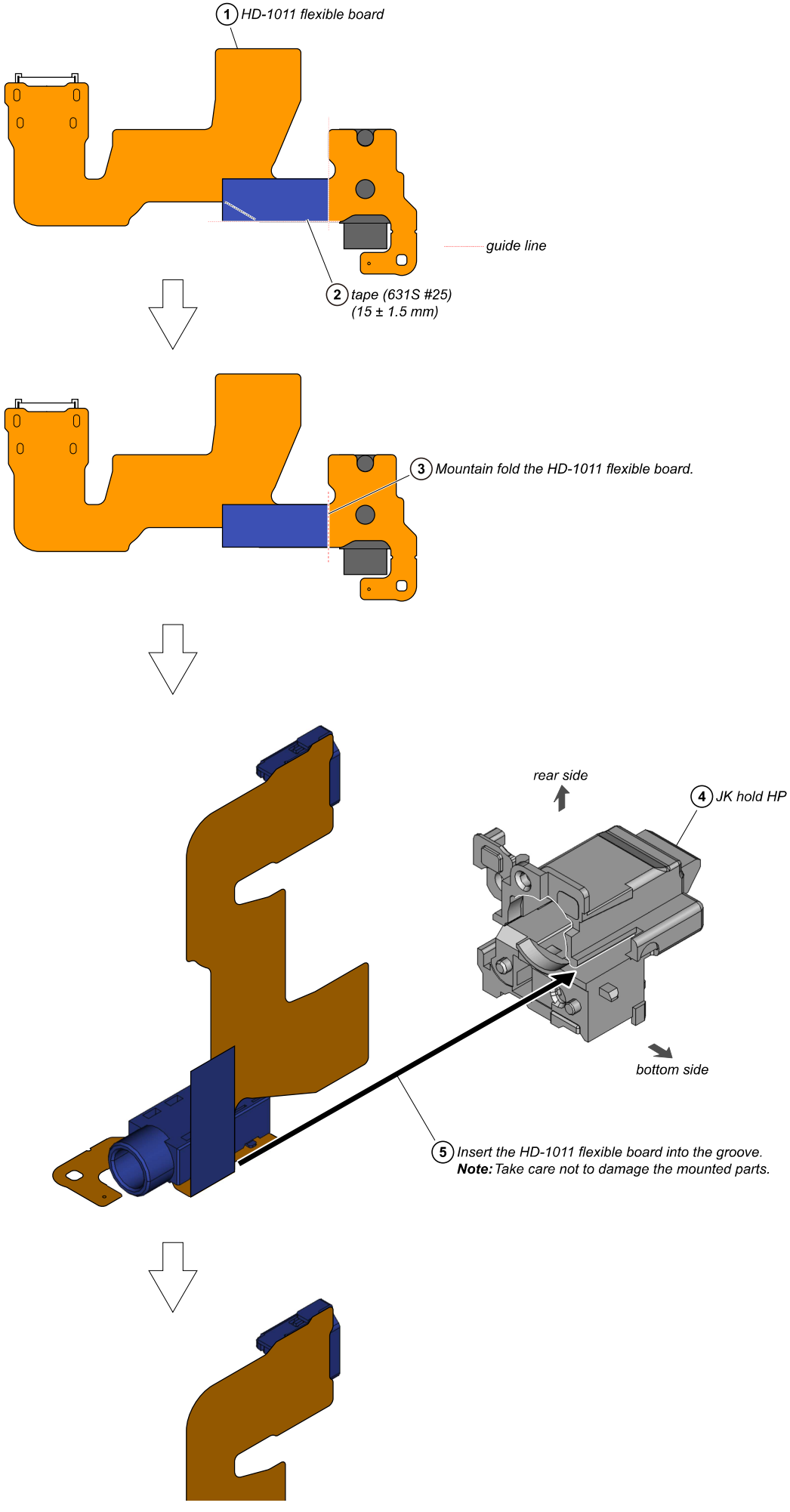
1 HD-1011 flexible board
guide line
2 tape (631S #25)
(15 ± 1.5 mm)
3 Mountain fold the HD-1011 flexible board.
rear side
4 JK hold HP
bottom side
5 Insert the HD-1011 flexible board into the groove.
Note: Take care not to damage the mounted parts.

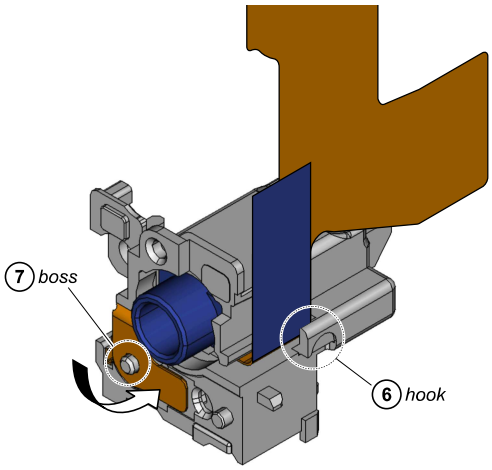
7 boss
6 hook

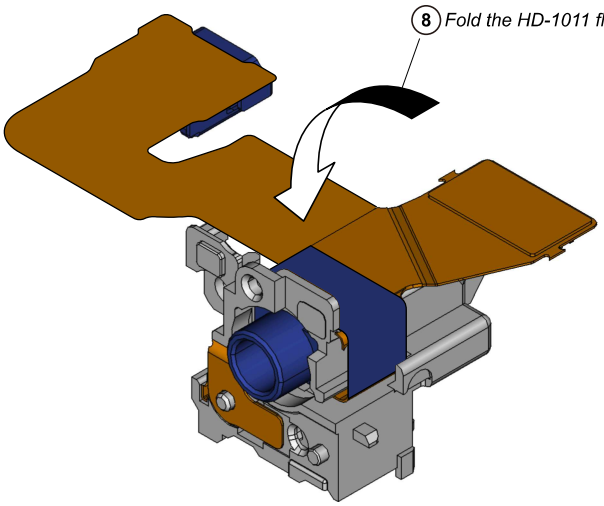
8 Fold the HD-1011 flexible board.

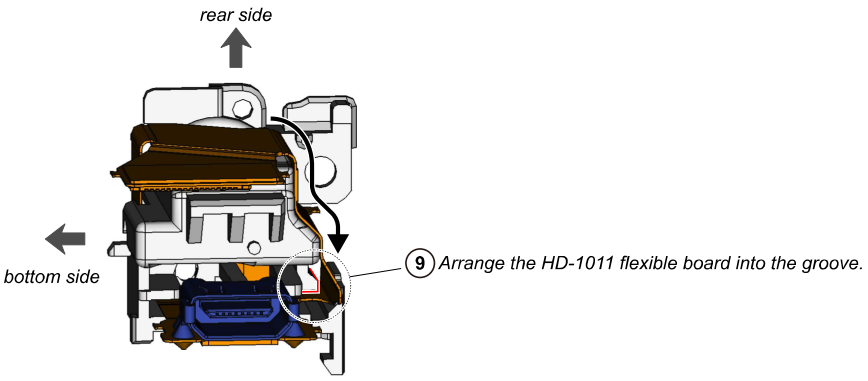
rear side
bottom side
9 Arrange the HD-1011 flexible board into the groove.

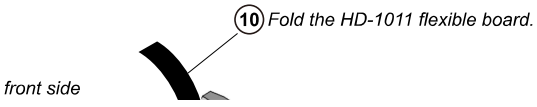
10 Fold the HD-1011 flexible board.
front side

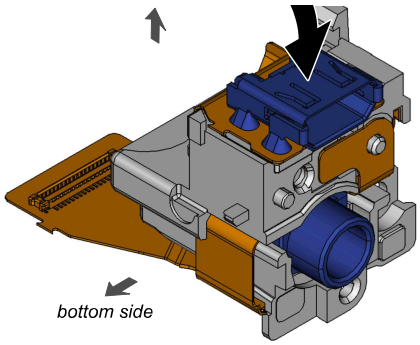
bottom side

7. JK HD PLATE

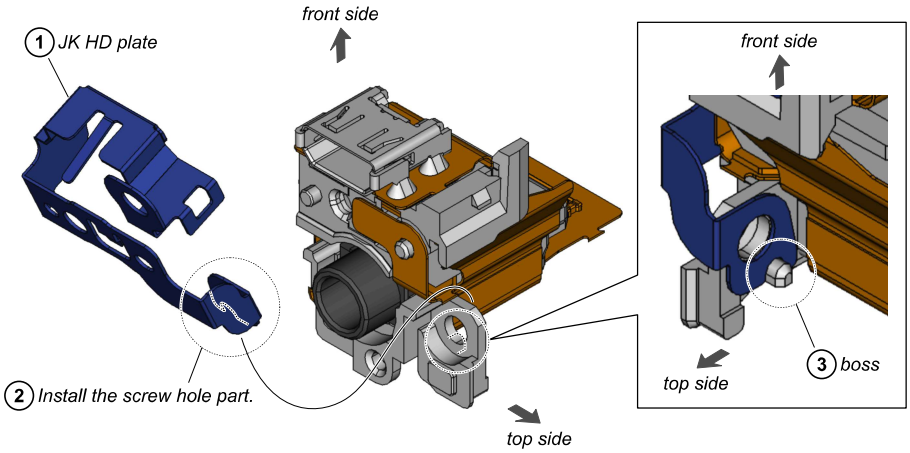
front side
1 JK HD plate
front side
2 Install the screw hole part.
top side
top side
3 boss

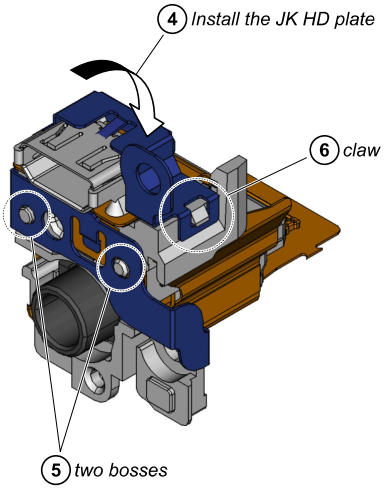
4 Install the JK HD plate
6 claw
5 two bosses

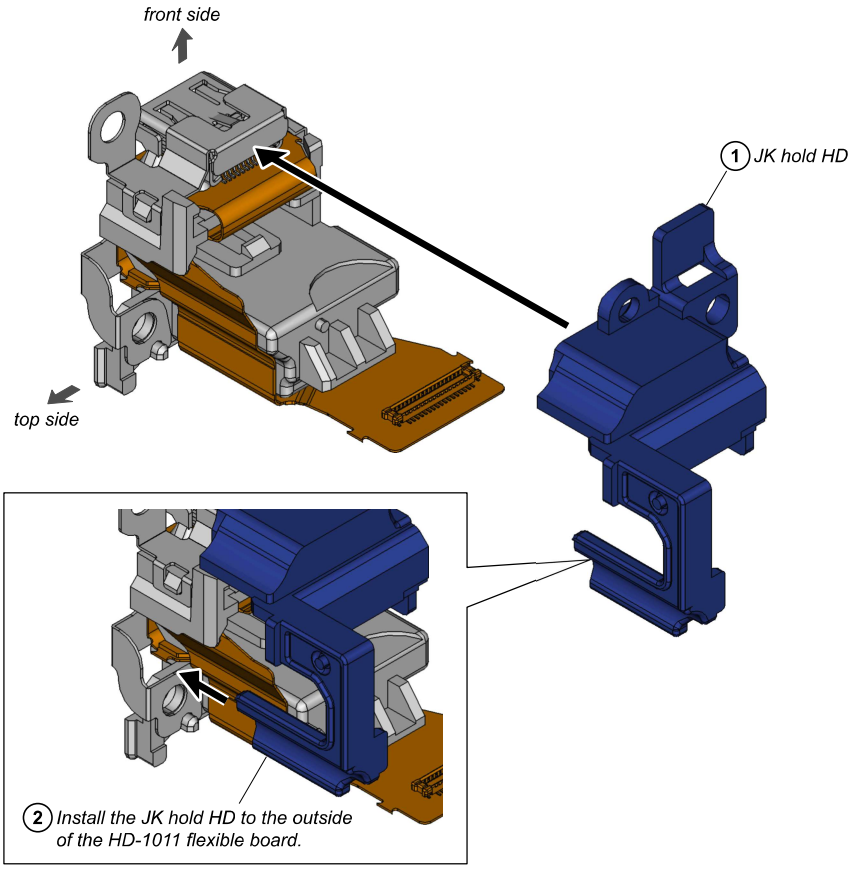
front side
1 JK hold HD
top side
2 Install the JK hold HD to the outside of the HD-1011 flexible board.

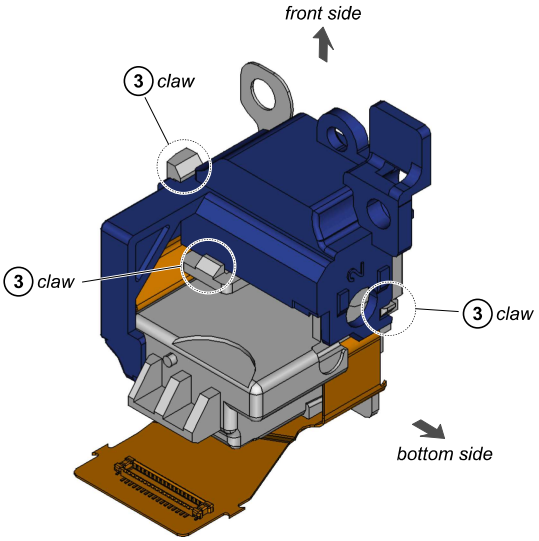
front side
3 claw
3 claw
3 claw
bottom side

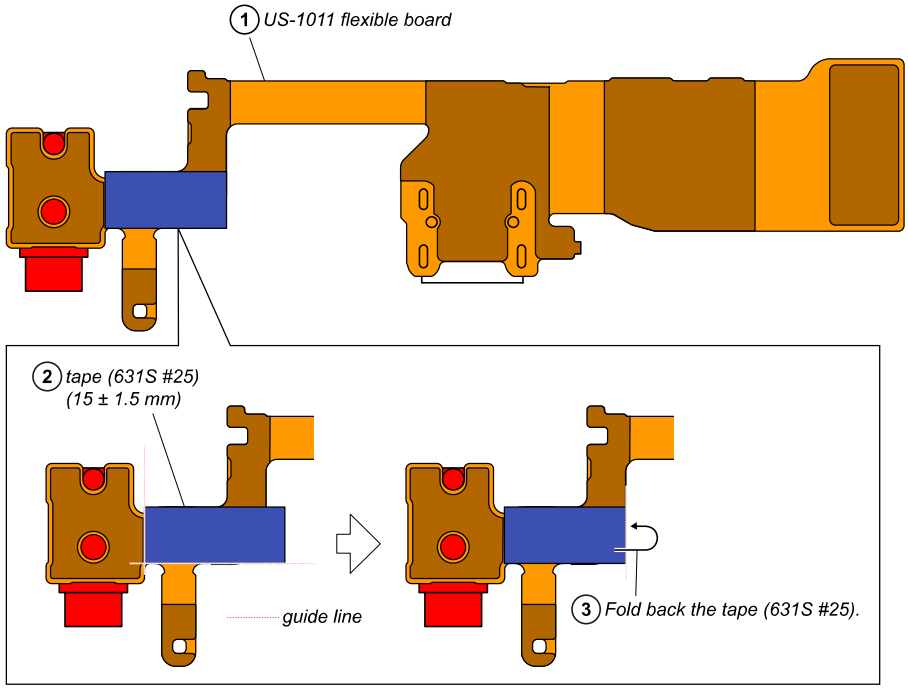
1 US-1011 flexible board
2 tape (631S #25)
(15 ± 1.5 mm)
guide line
3 Fold back the tape (631S #25).

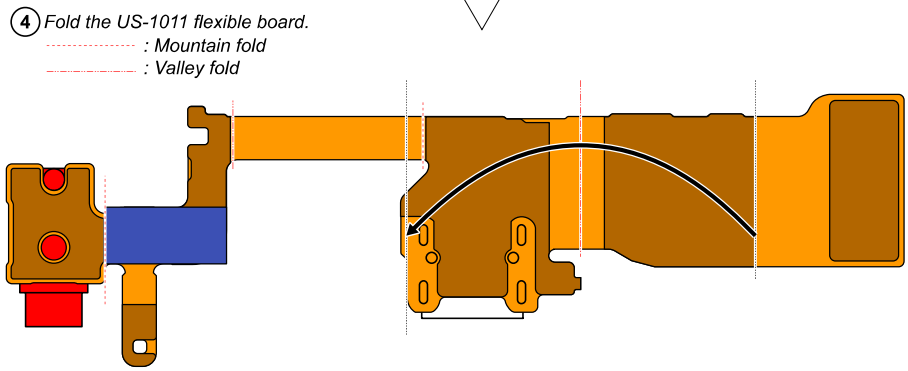
4 Fold the US-1011 flexible board.
: Mountain fold
: Valley fold

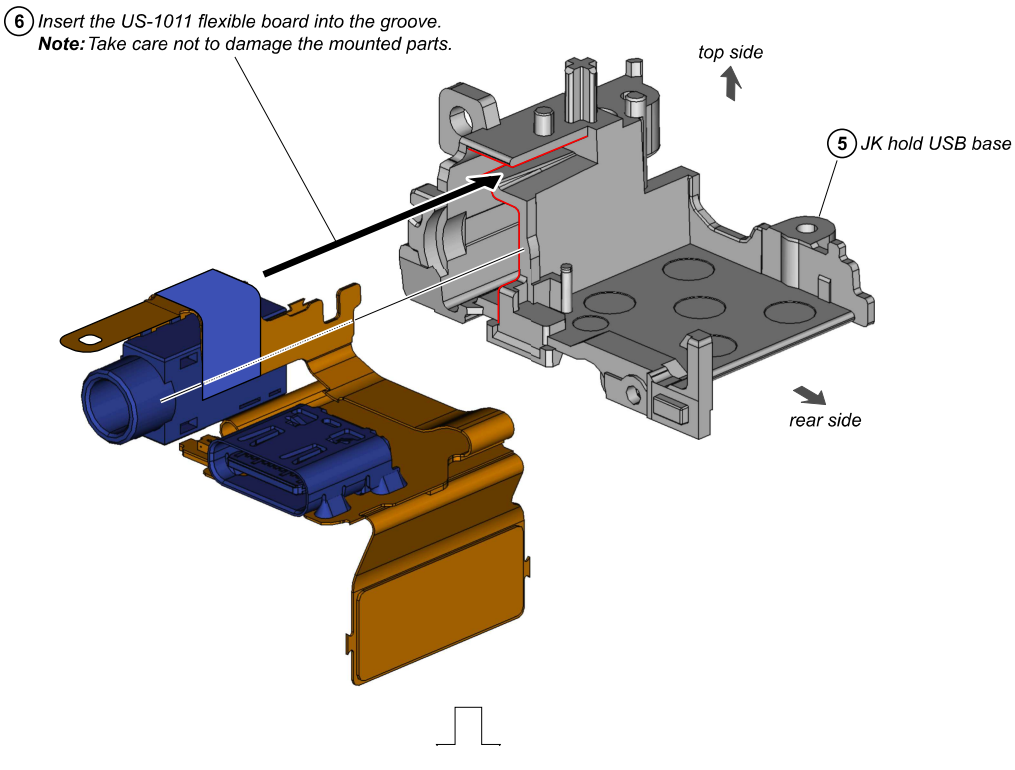
6 Insert the US-1011 flexible board into the groove.
Note: Take care not to damage the mounted parts.
top side
5 JK hold USB base
rear side

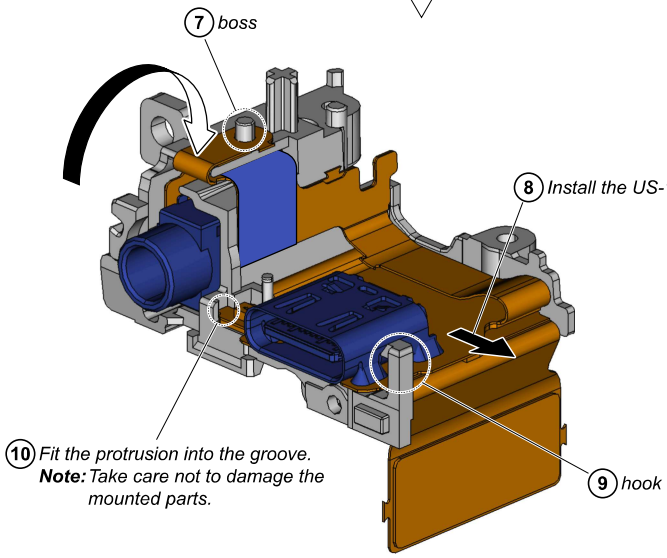
7 boss
8 Install the US-1011 flexible board by sliding it in the direction of the arrow.
10 Fit the protrusion into the groove.
Note: Take care not to damage the mounted parts.
9 hook

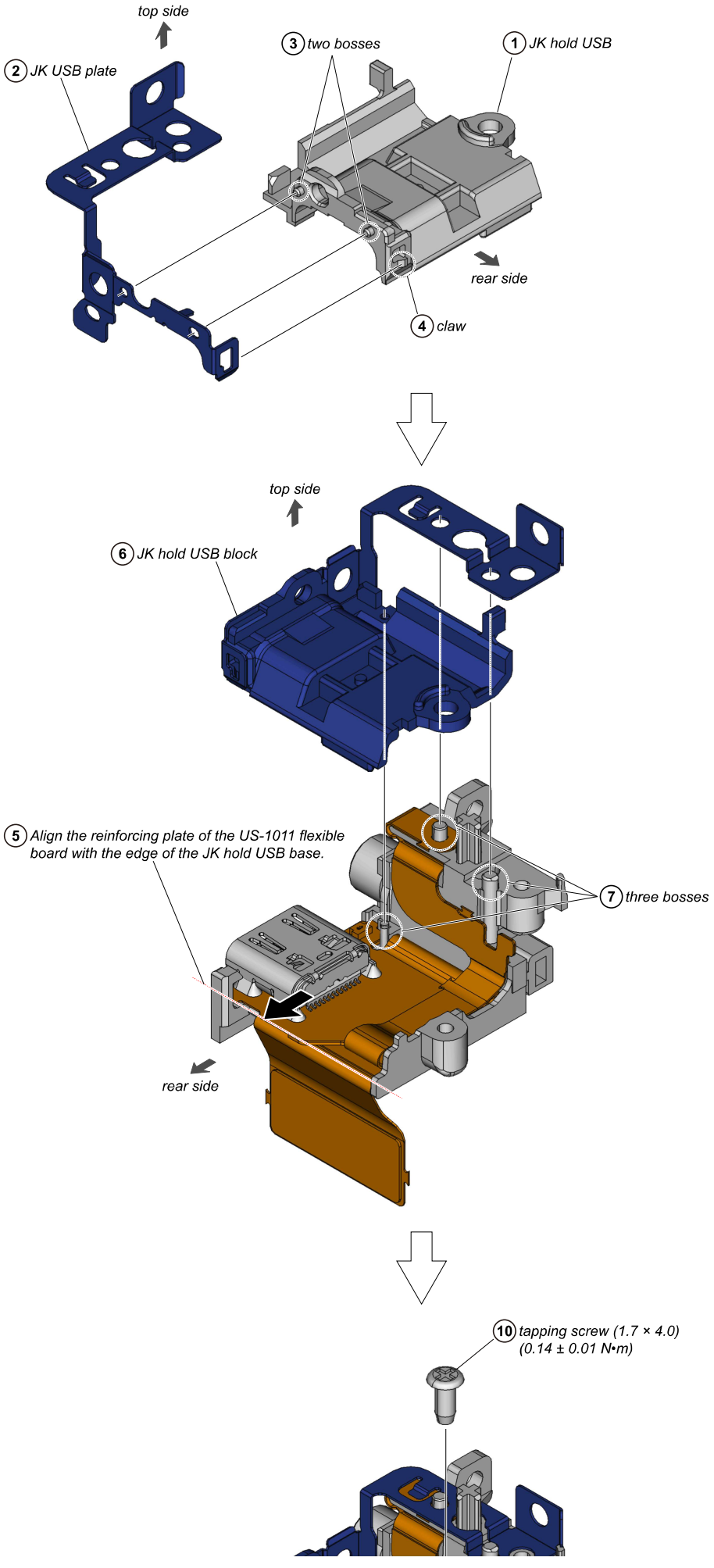
top side
2 JK USB plate
3 two bosses
1 JK hold USB
rear side
4 claw
top side
6 JK hold USB block
5 Align the reinforcing plate of the US-1011 flexible board with the edge of the JK hold USB base.
7 three bosses
rear side
10 tapping screw (1.7 × 4.0) (0.14 ± 0.01 N•m)

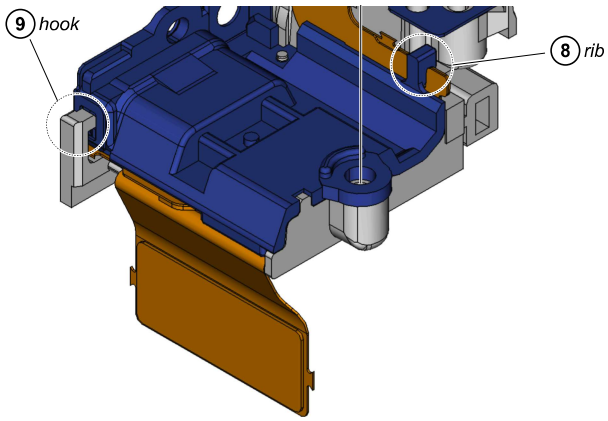
9 hook
8 rib

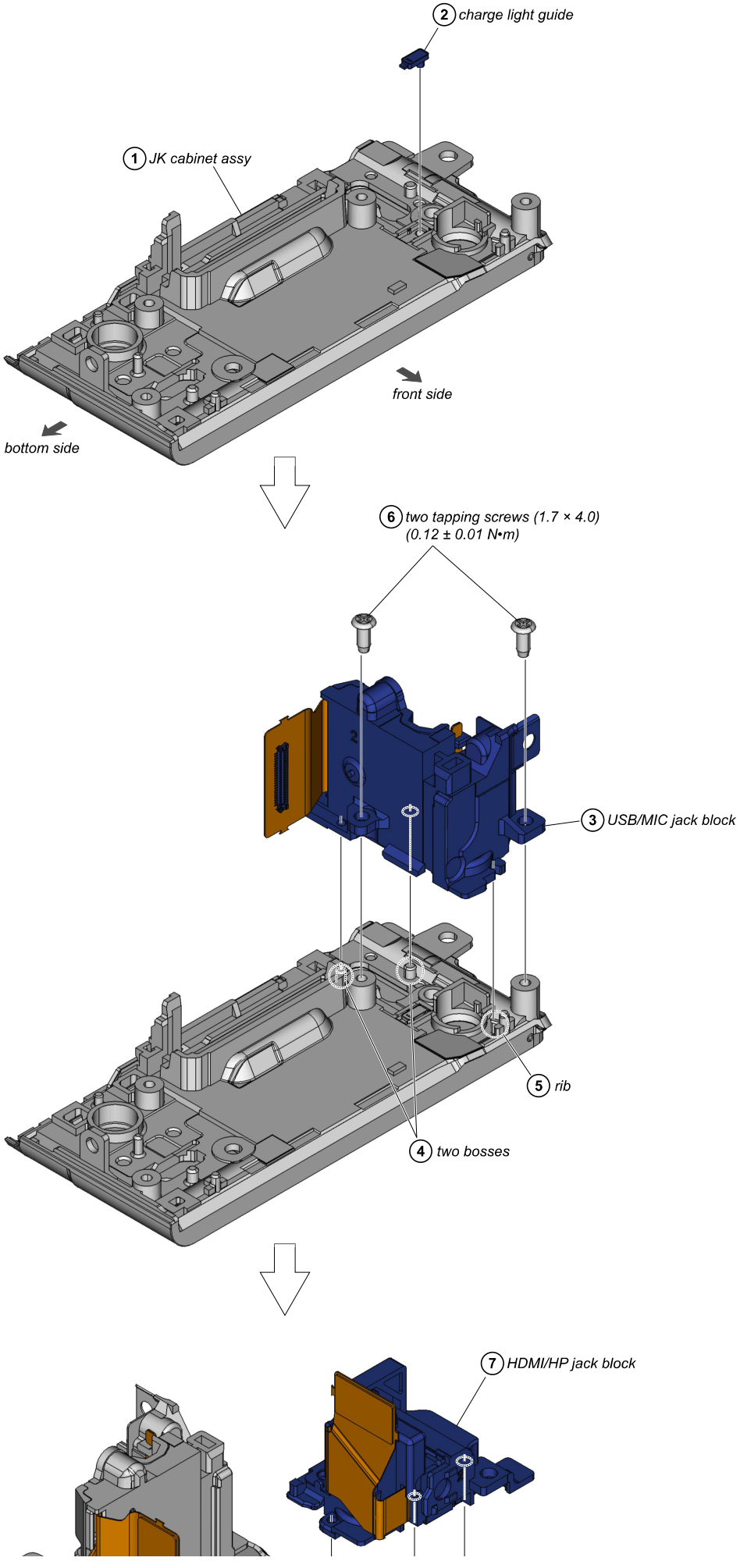
2 charge light guide
1 JK cabinet assy
front side
bottom side
6 two tapping screws (1.7 × 4.0)
(0.12 ± 0.01 N•m)
3 USB/MIC jack block
5 rib
4 two bosses
7 HDMI/HP jack block

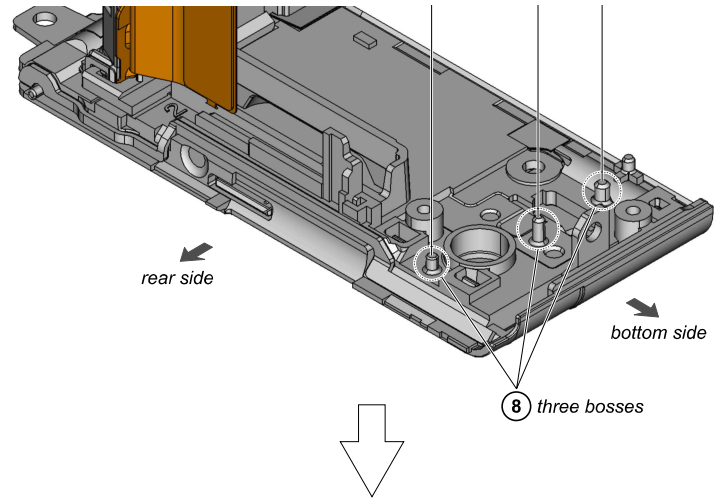
rear side
bottom side
8 three bosses

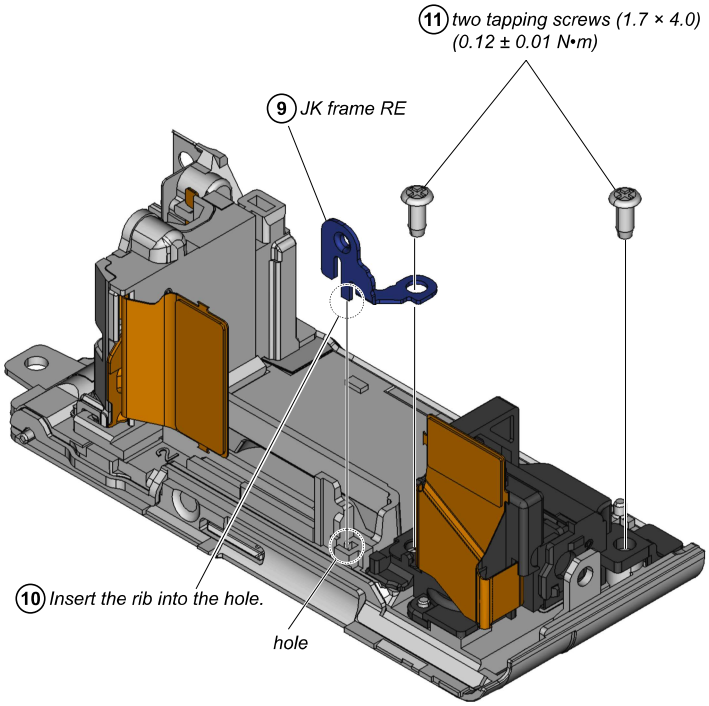
11 two tapping screws (1.7 × 4.0)
(0.12 ± 0.01 N•m)
9 JK frame RE
10 Insert the rib into the hole.
hole

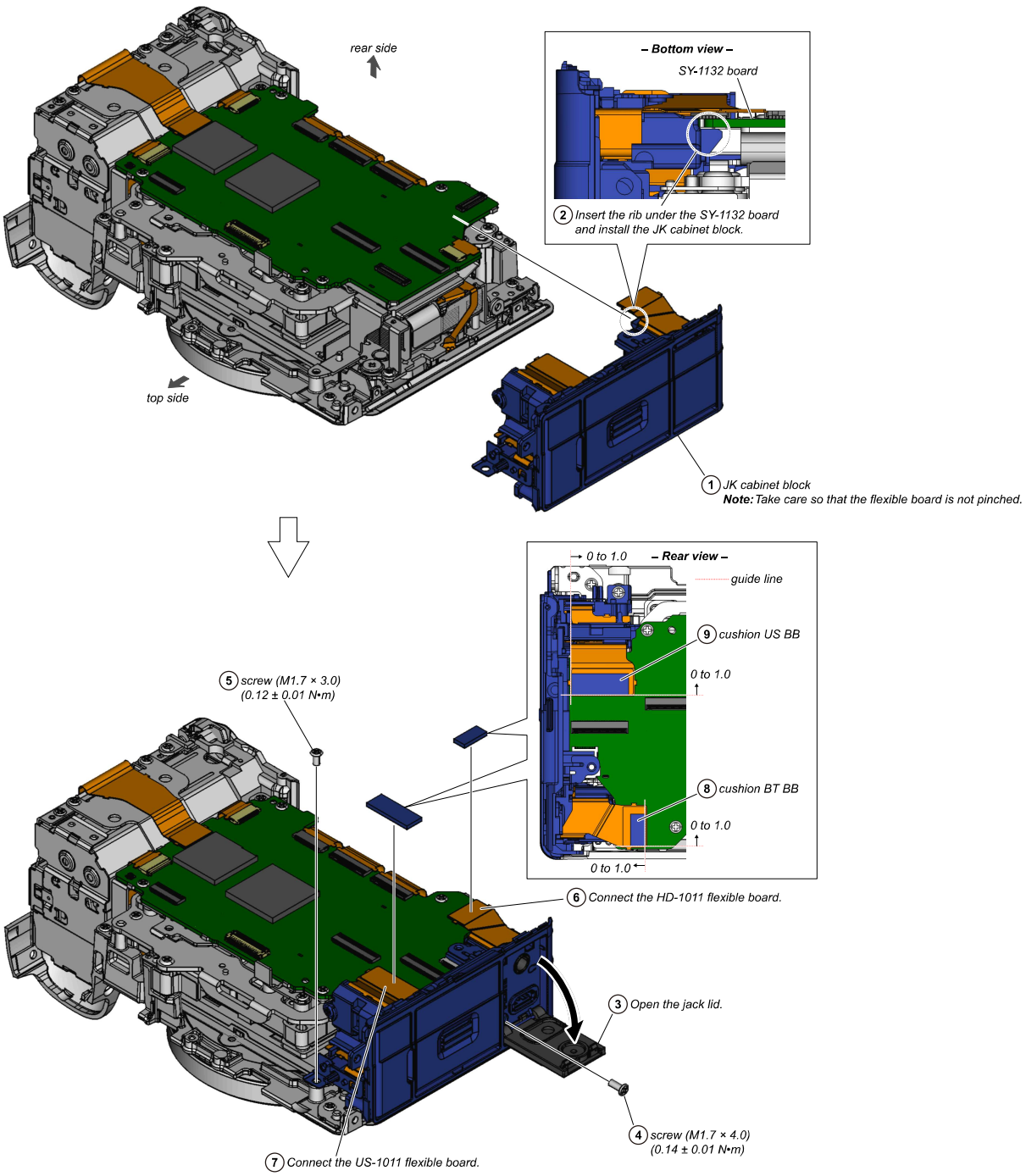
rear side
top side
– Bottom view –
SY-1132 board
2 Insert the rib under the SY-1132 board and install the JK cabinet block.
1 JK cabinet block
Note: Take care so that the flexible board is not pinched.
0 to 1.0
– Rear view –
guide line
9 cushion US BB
0 to 1.0
8 cushion BT BB
0 to 1.0
0 to 1.0
5 screw (M1.7 × 3.0) (0.12 ± 0.01 N•m)
6 Connect the HD-1011 flexible board.
3 Open the jack lid.
4 screw (M1.7 × 4.0) (0.14 ± 0.01 N•m)
7 Connect the US-1011 flexible board.

13. COLOR EVF UNIT (not supplied)

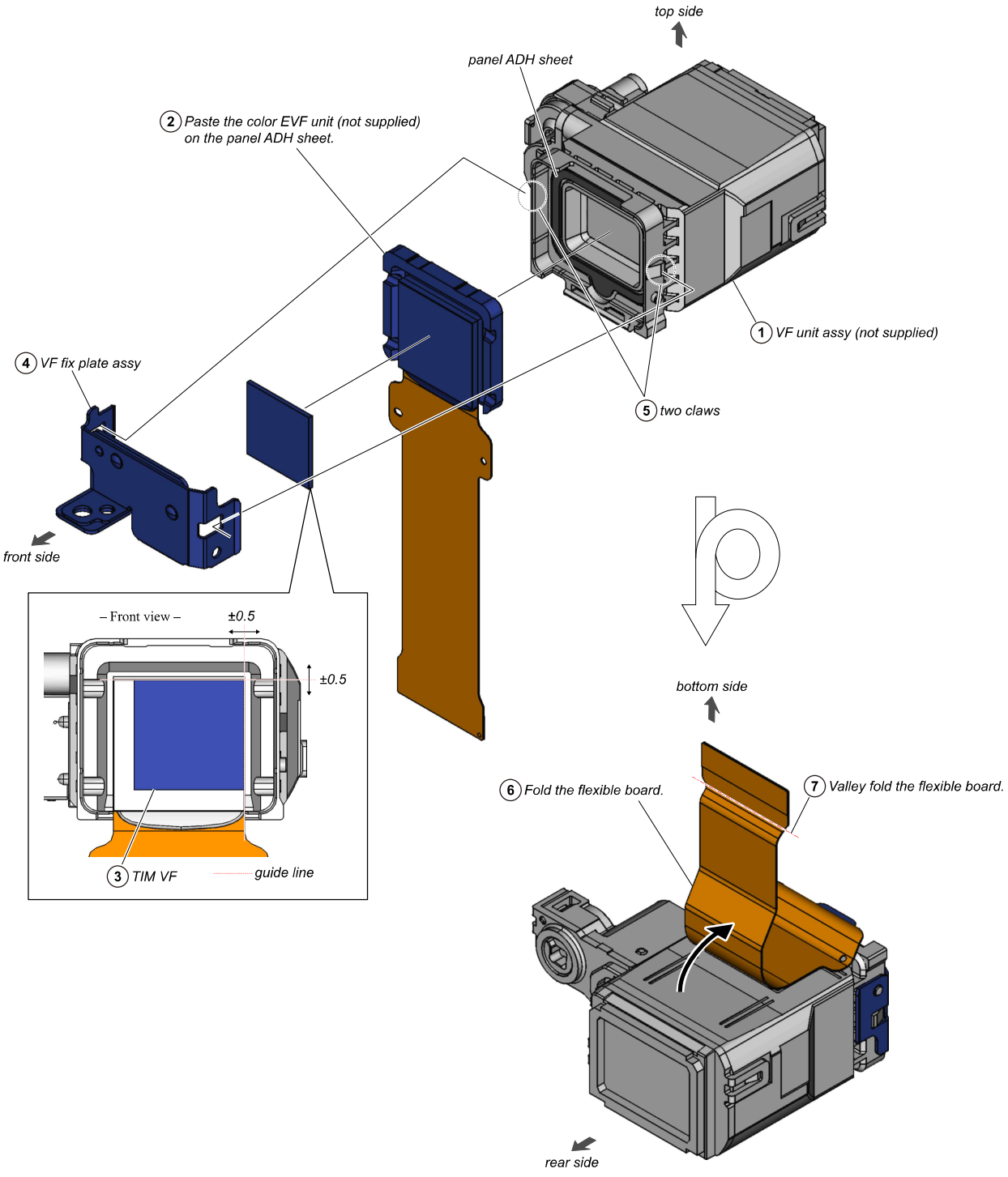

14. EVF BLOCK

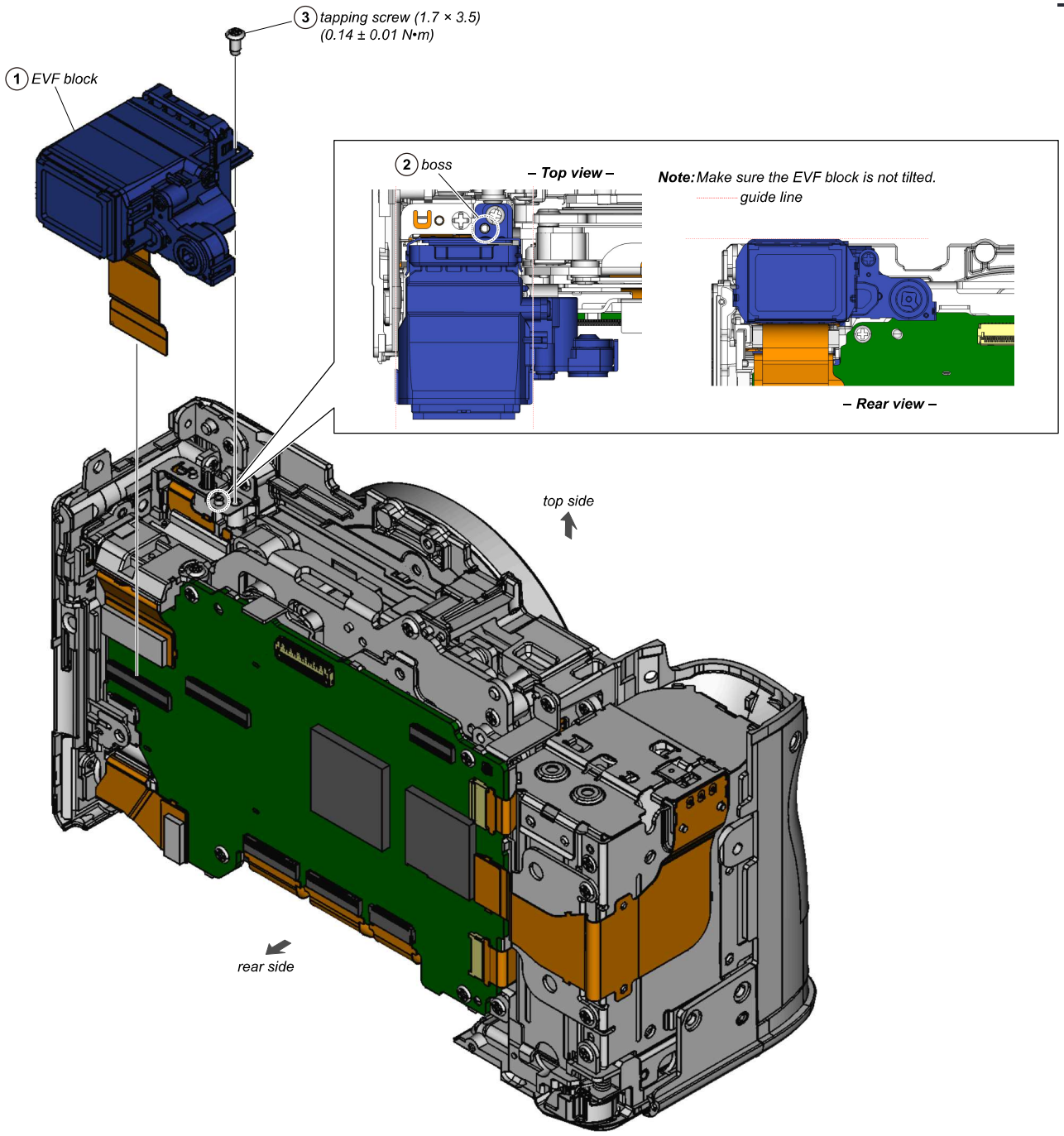
3 tapping screw (1.7 × 3.5)
(0.14 ± 0.01 N•m)
1 EVF block
2 boss
– Top view –
Note: Make sure the EVF block is not tilted.
guide line
– Rear view –
top side
rear side

15. SPEAKER BLIND SHEET, MD PROTECTION SHEET

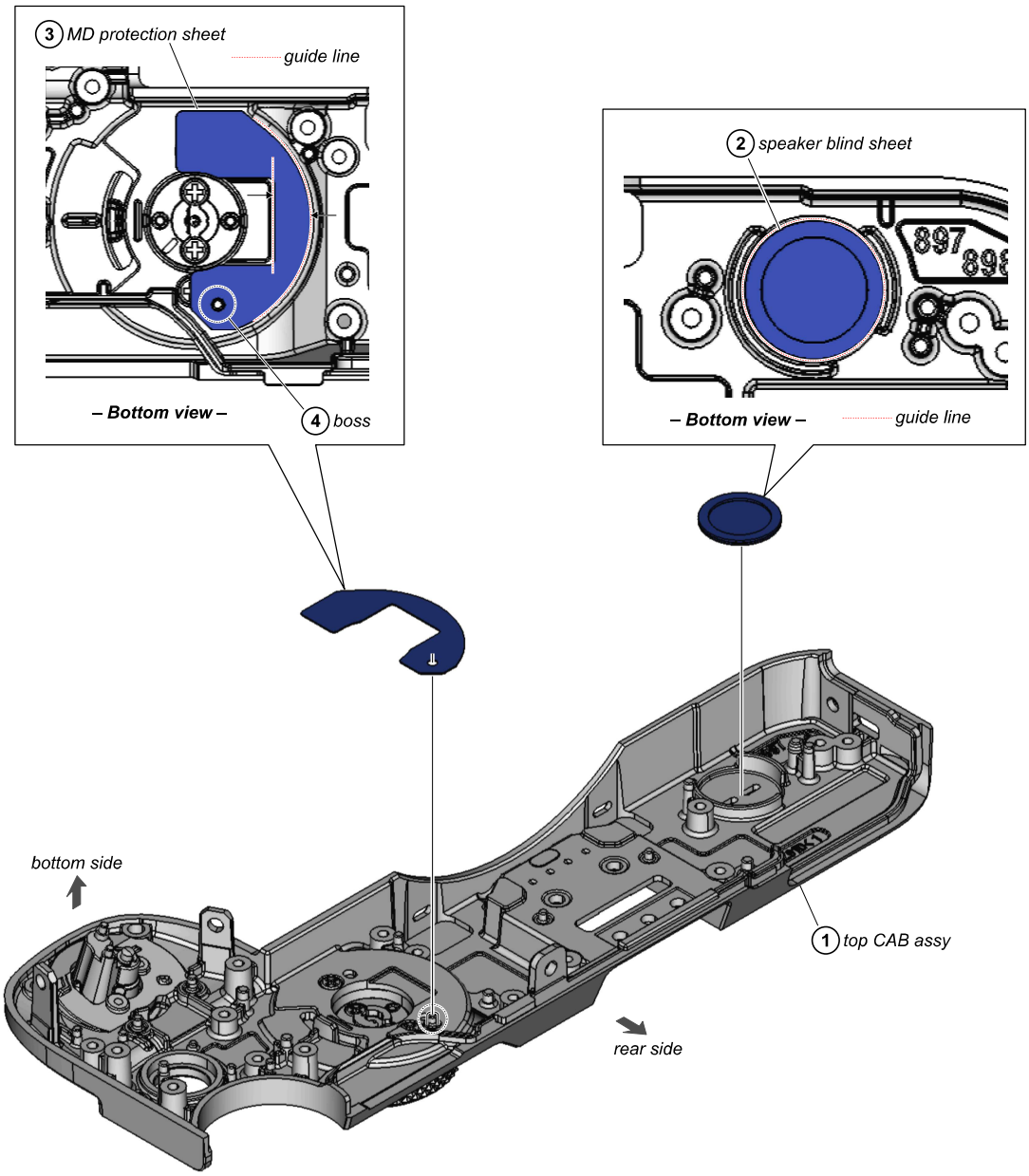

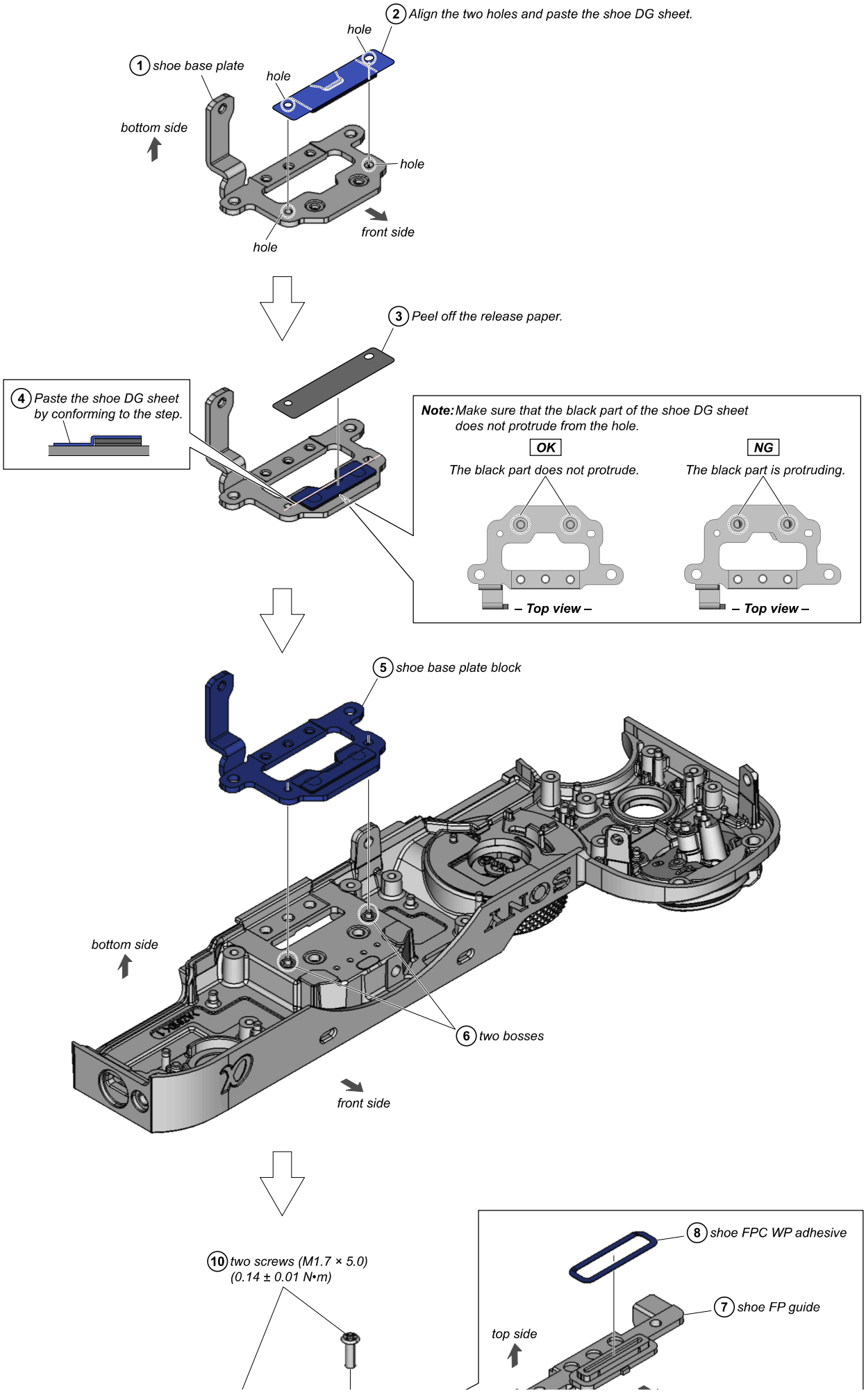
2 Align the two holes and paste the shoe DG sheet.
hole
1 shoe base plate
hole
bottom side
hole
hole
front side
3 Peel off the release paper.
4 Paste the shoe DG sheet by conforming to the step.
Note: Make sure that the black part of the shoe DG sheet does not protrude from the hole.
OK
The black part does not protrude.
NG
The black part is protruding.
– Top view –
– Top view –
5 shoe base plate block
bottom side
6 two bosses
front side
10 two screws (M1.7 × 5.0)
(0.14 ± 0.01 N•m)
8 shoe FPC WP adhesive
7 shoe FP guide
top side

front side

⑨ *Paste the shoe FP guide block.*

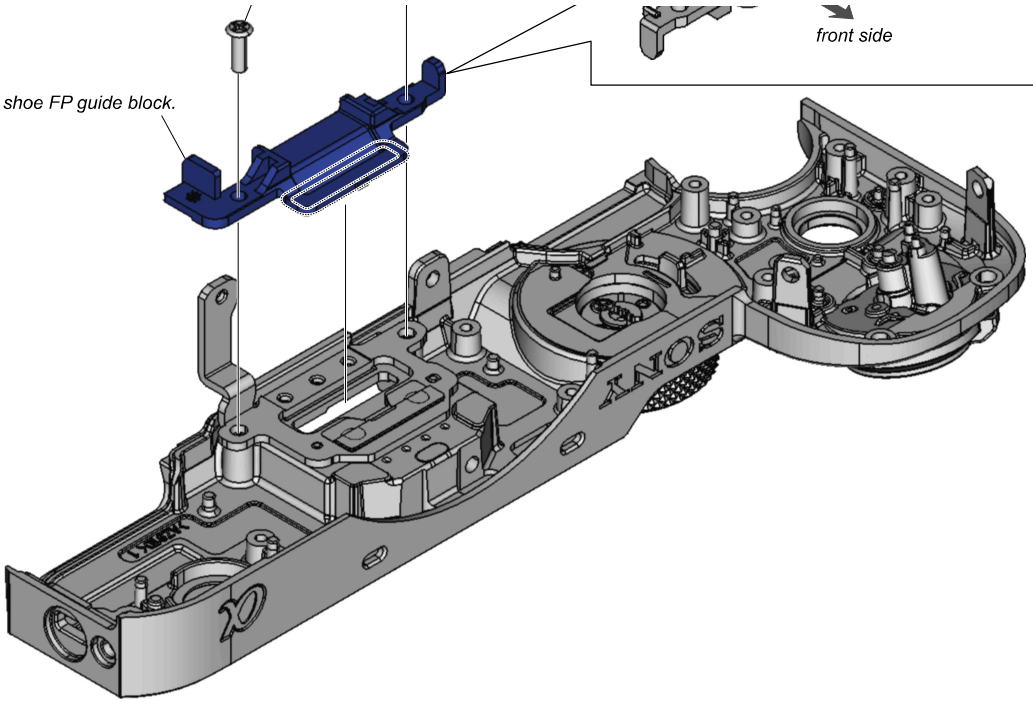

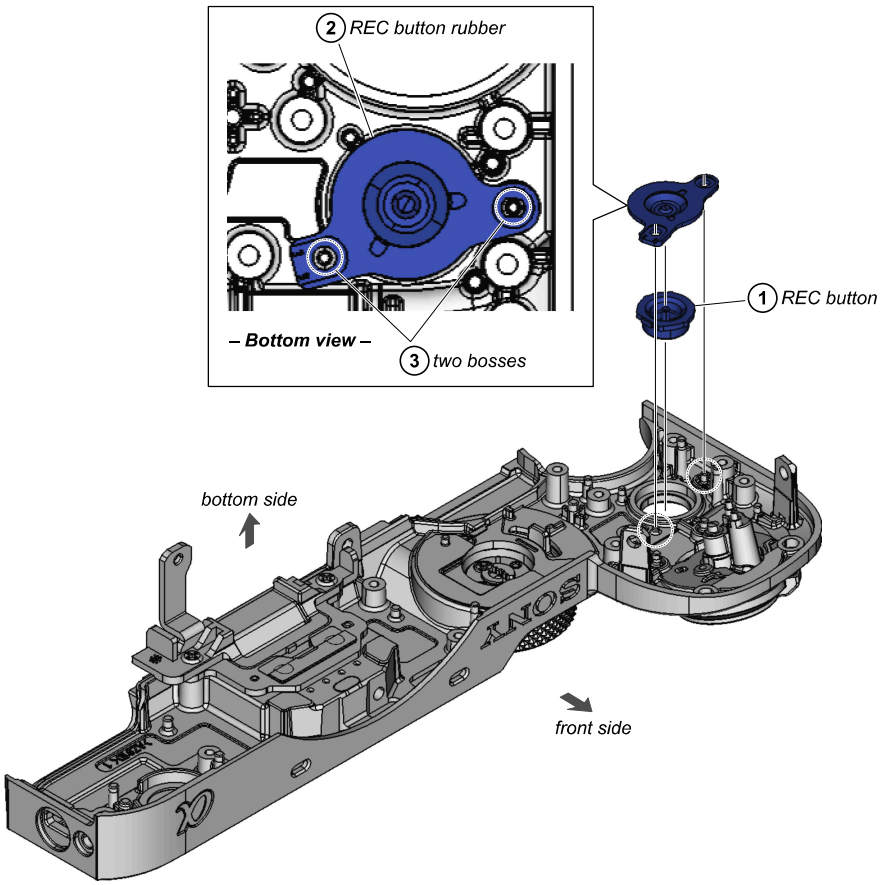
2 REC button rubber
– Bottom view –
3 two bosses
1 REC button
bottom side
front side

18. LOUDSPEAKER (1.0 CM), ELECTRET CONDENSER MICROPHONE

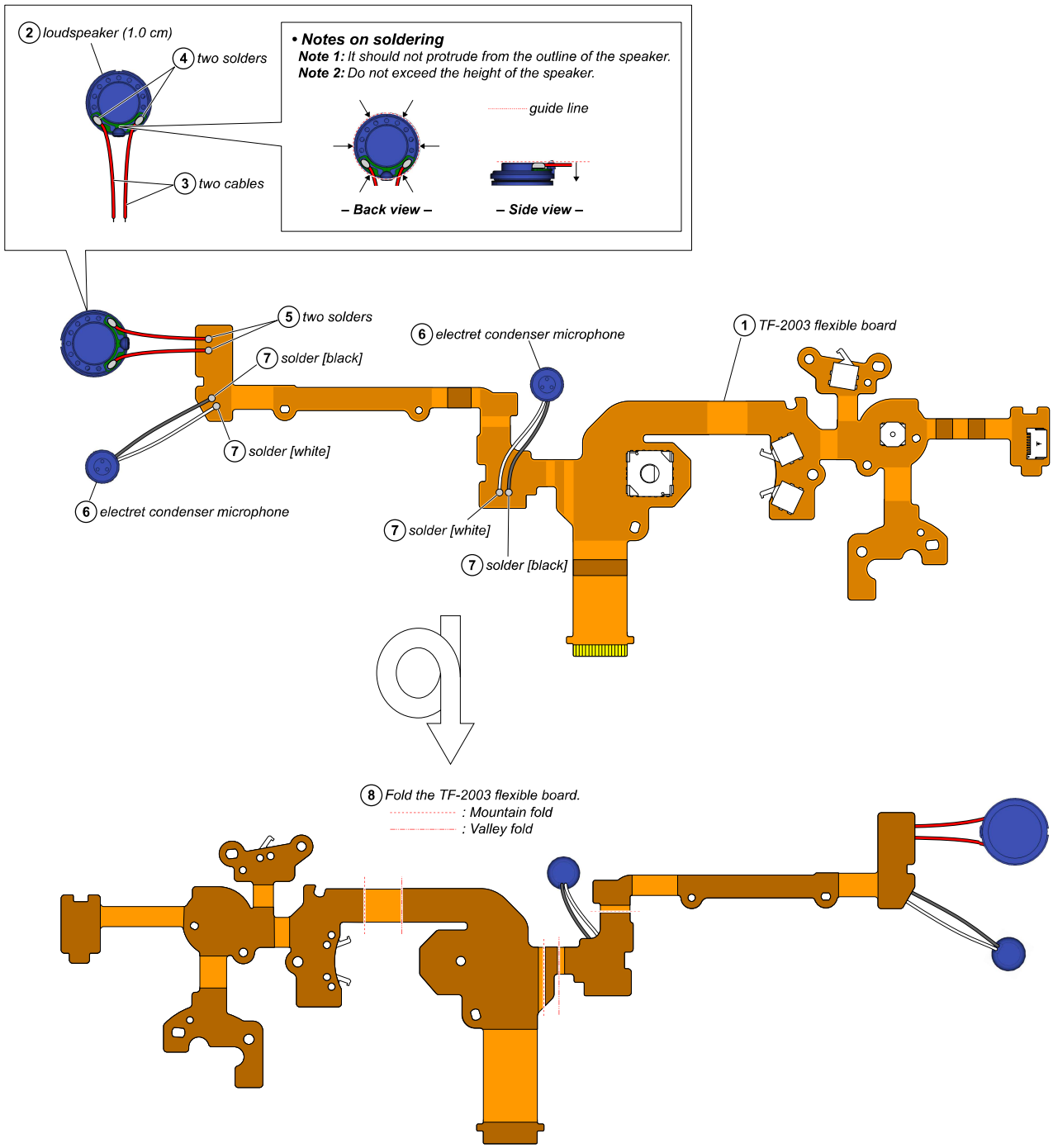

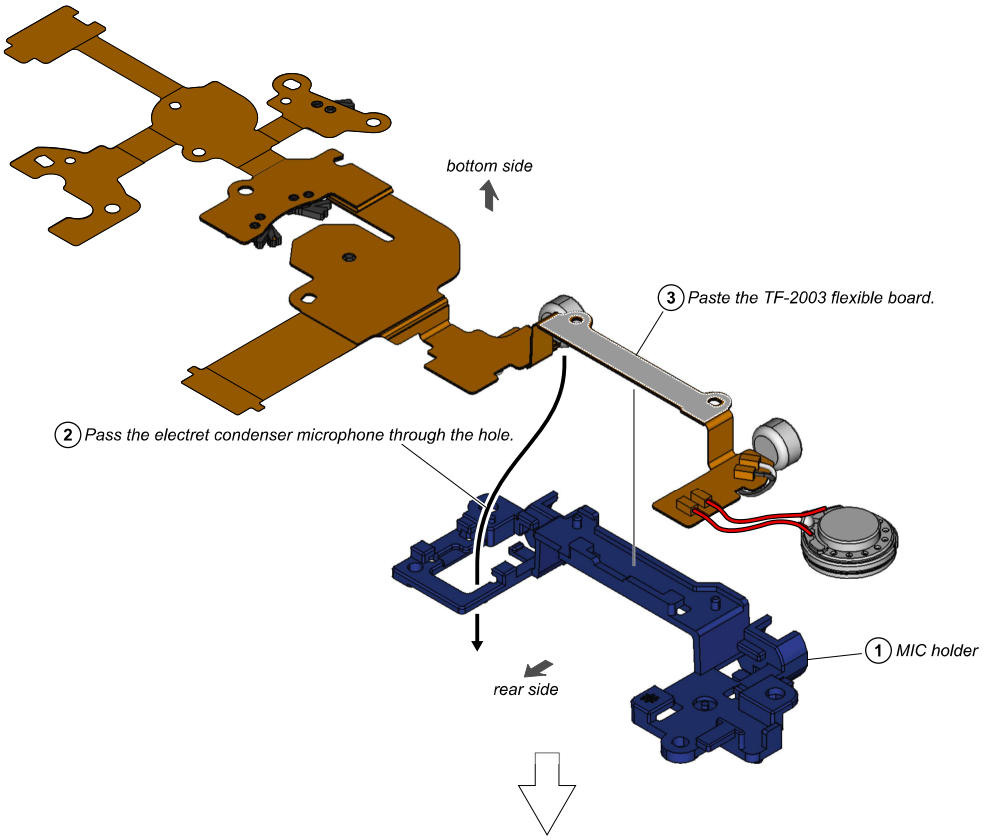

– Bottom view –

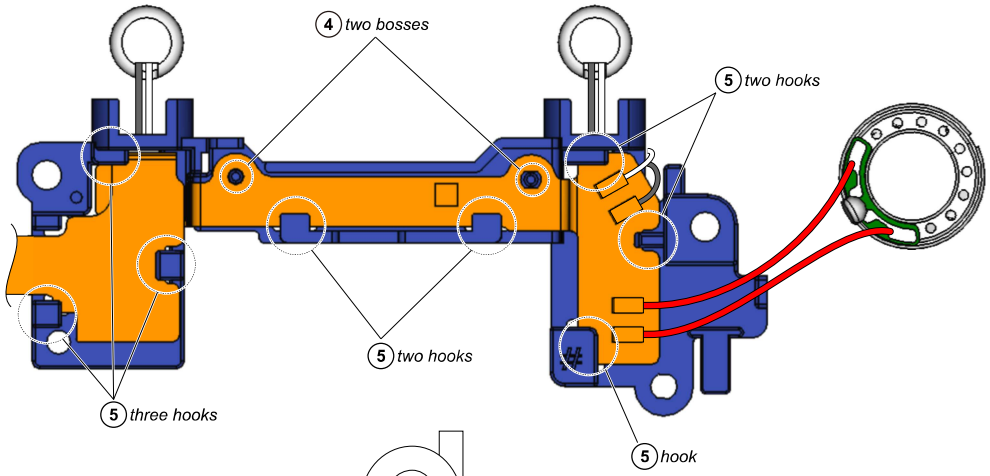

– Top view –

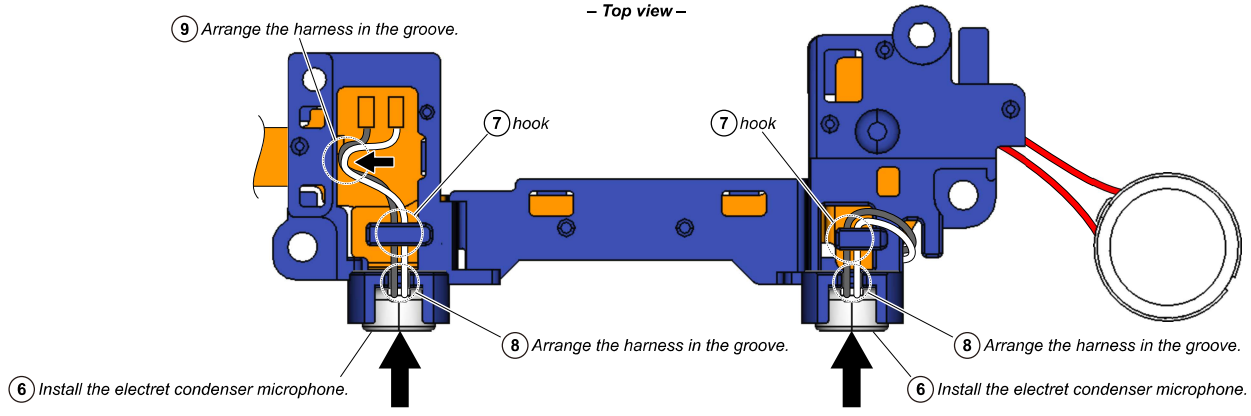

20. REC HOLDER PLATE, PW SW PLATE

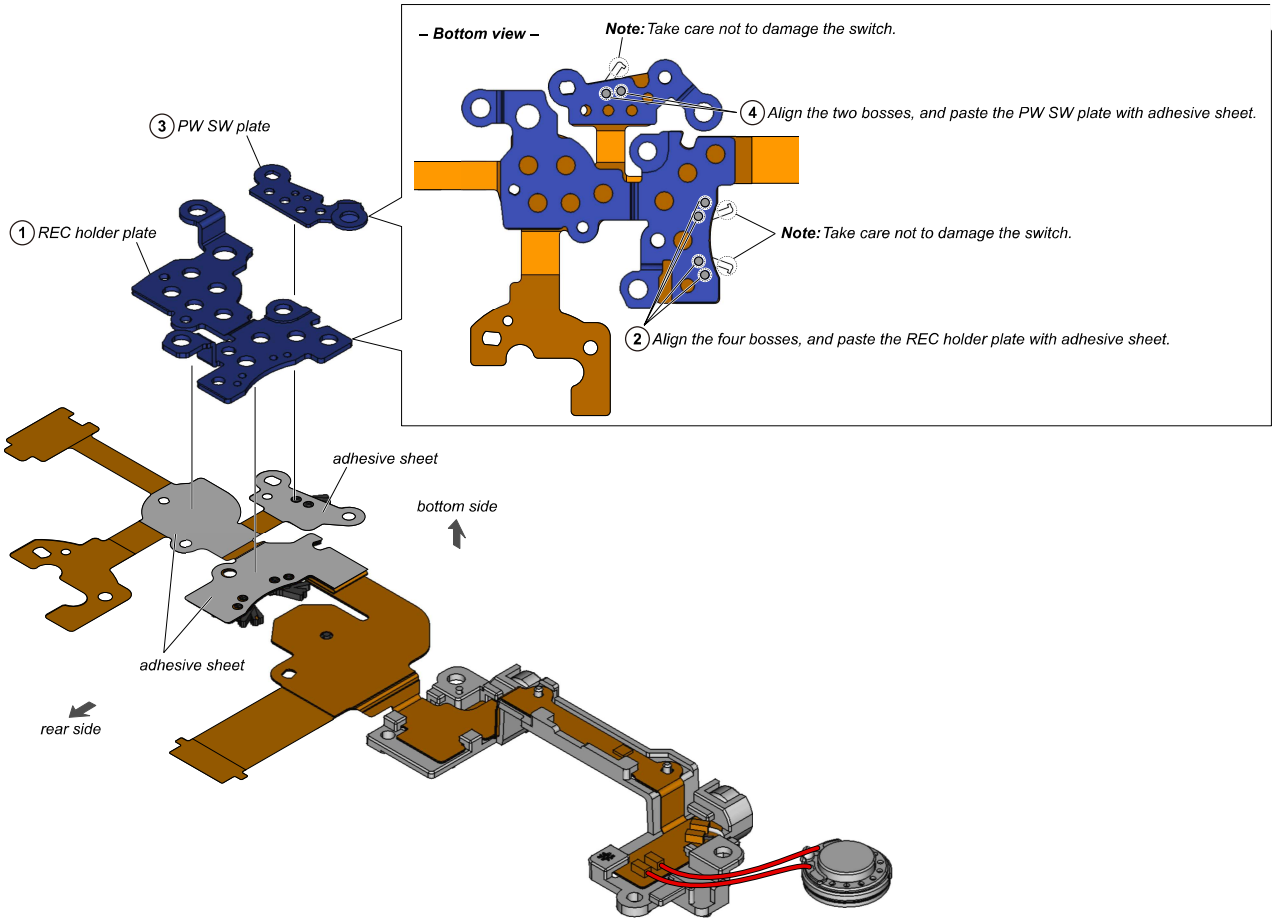

21. TF-2003 FLEXIBLE BOARD BLOCK

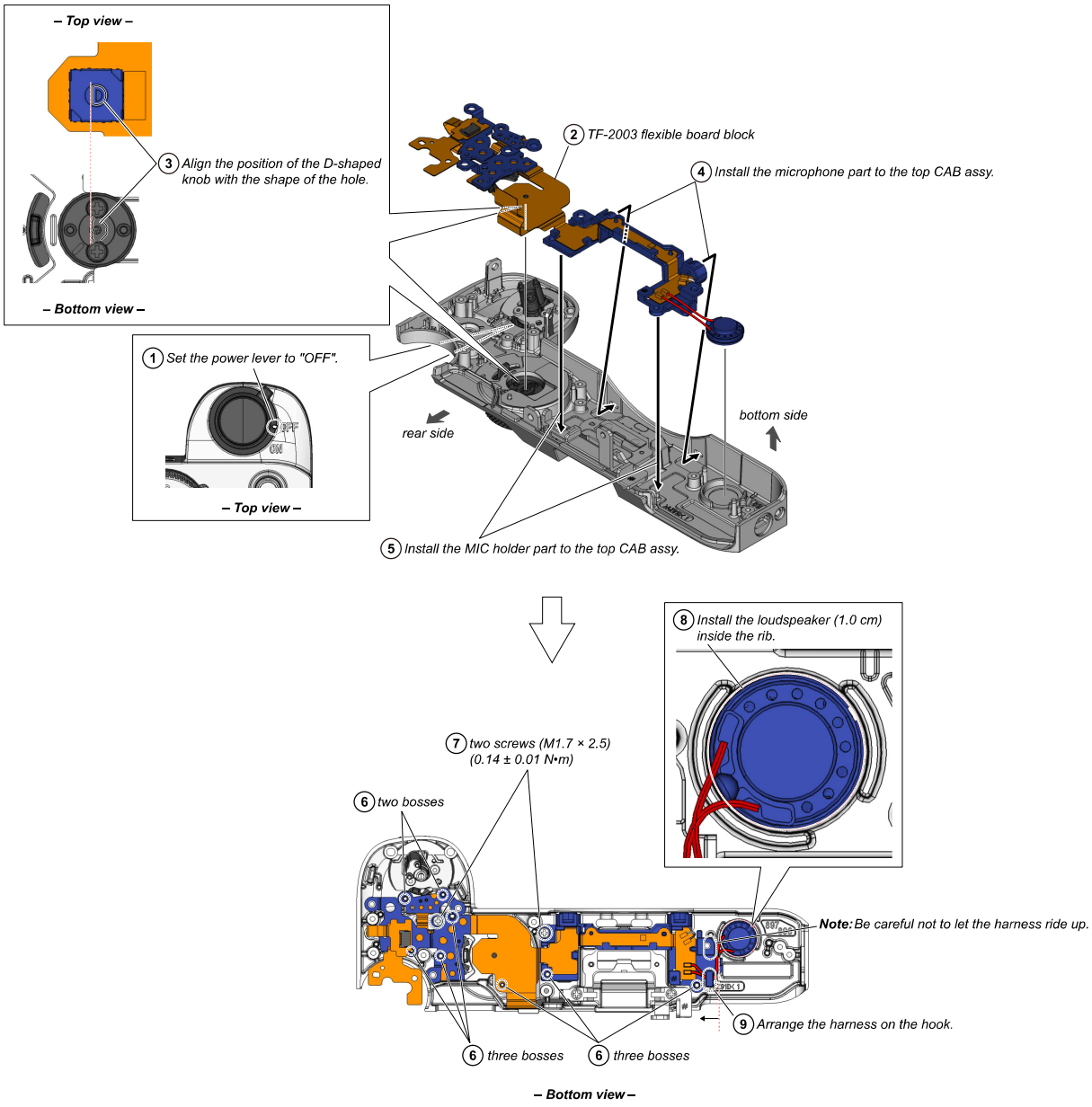

22. TOP CONNECT PLATE L ASSY

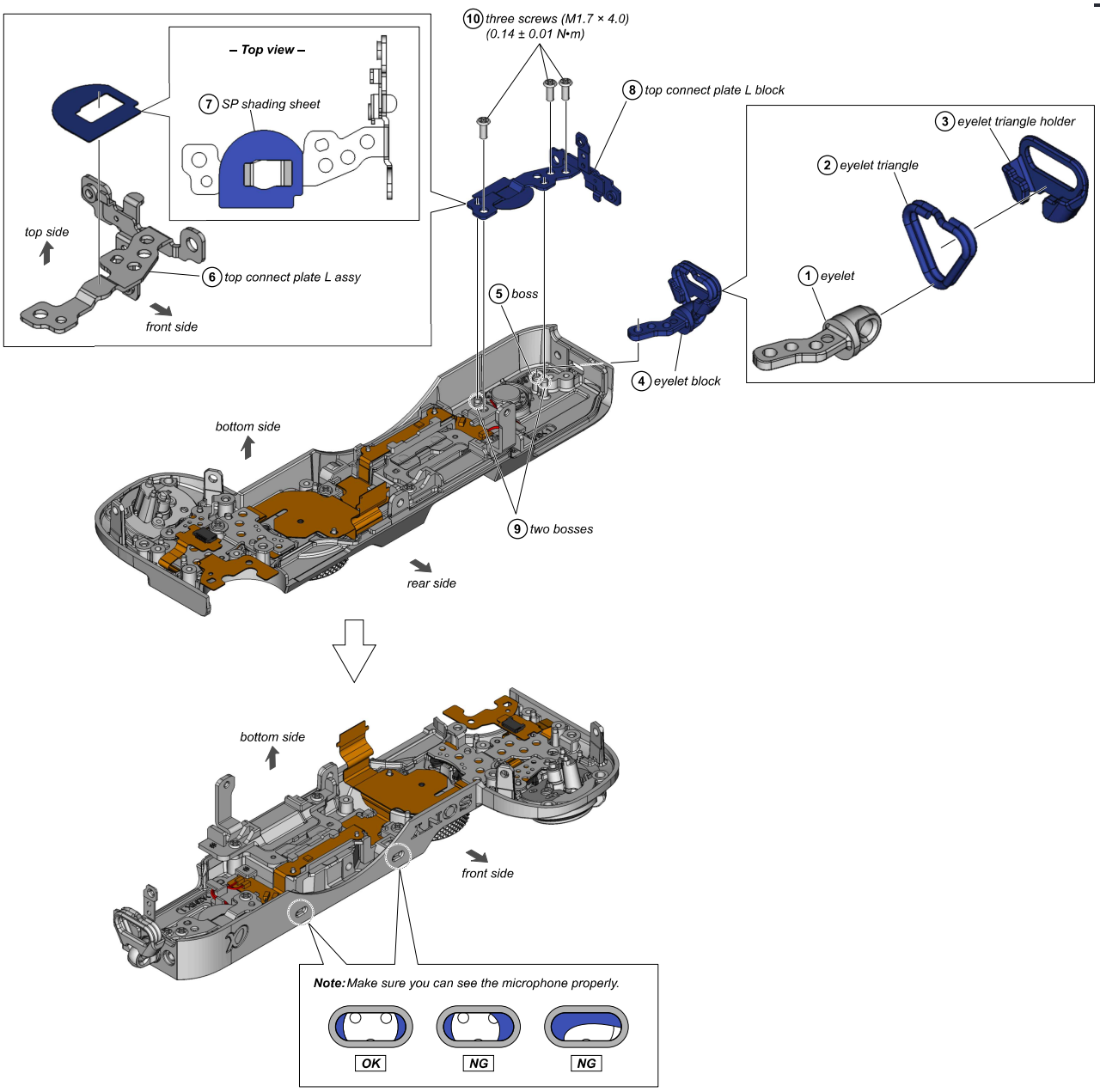

23. MD HOLDER PLATE, RL BASE PLATE

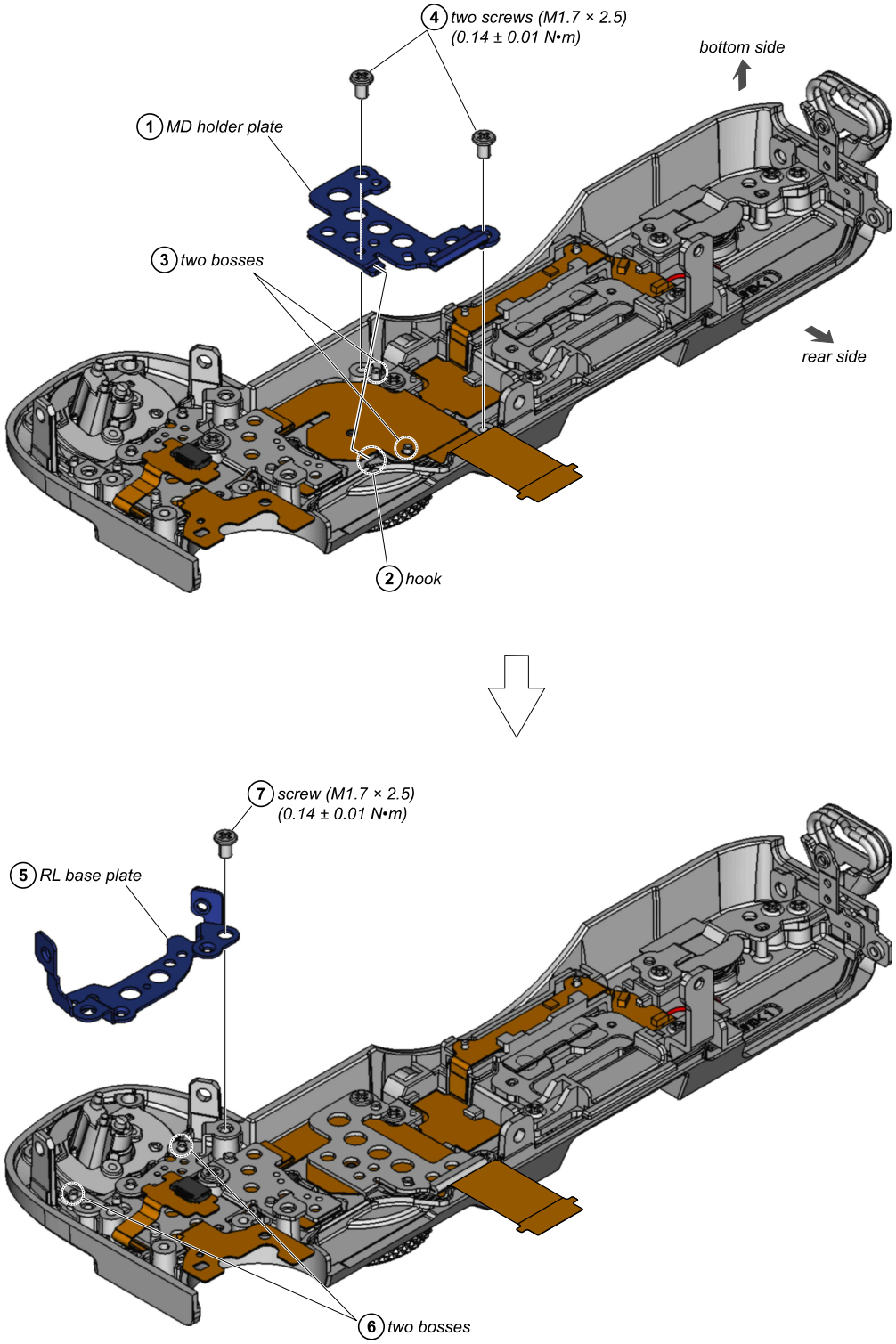

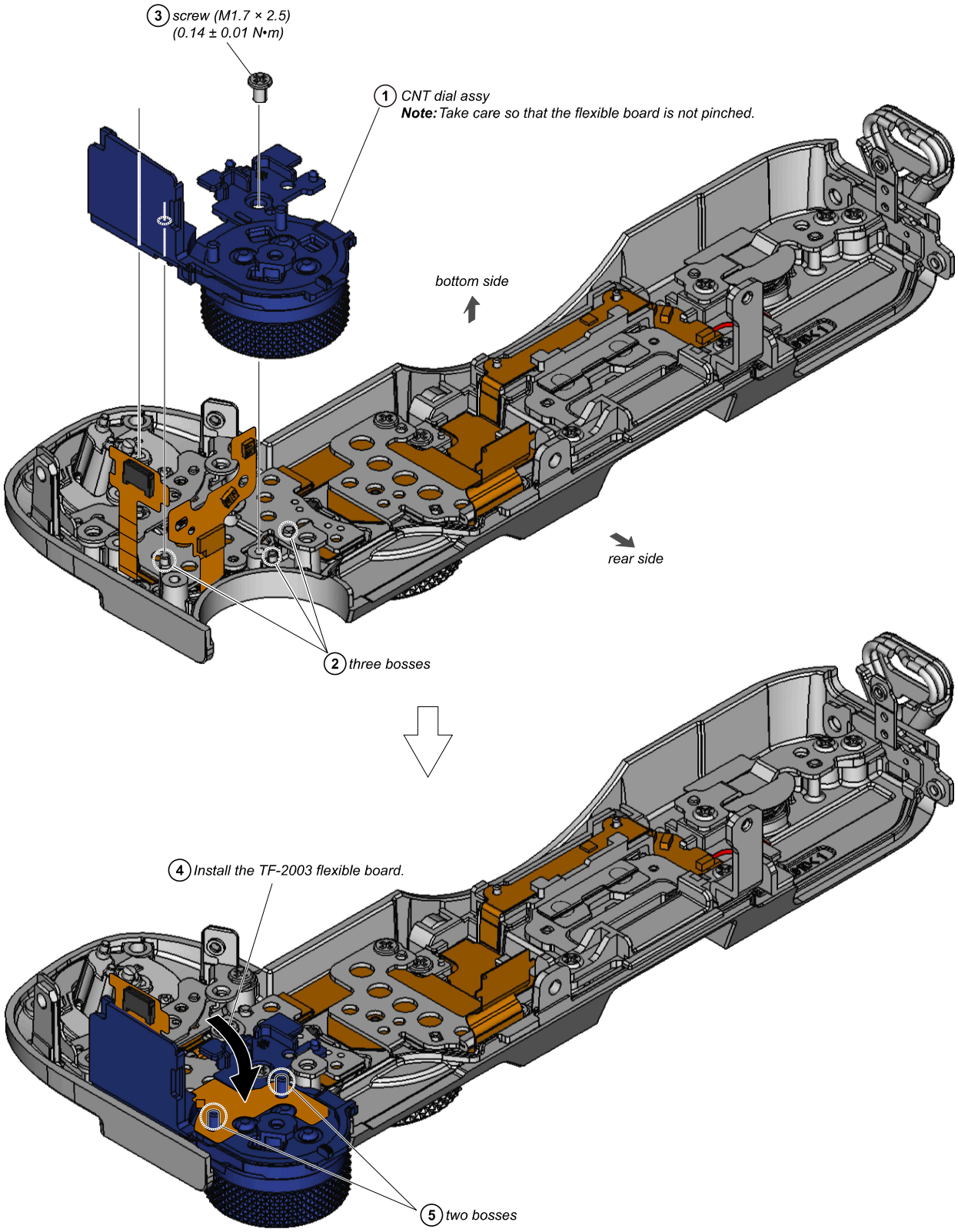
3 screw (M1.7 × 2.5)
(0.14 ± 0.01 N•m)
1 CNT dial assy
Note: Take care so that the flexible board is not pinched.
bottom side
rear side
2 three bosses
4 Install the TF-2003 flexible board.
5 two bosses

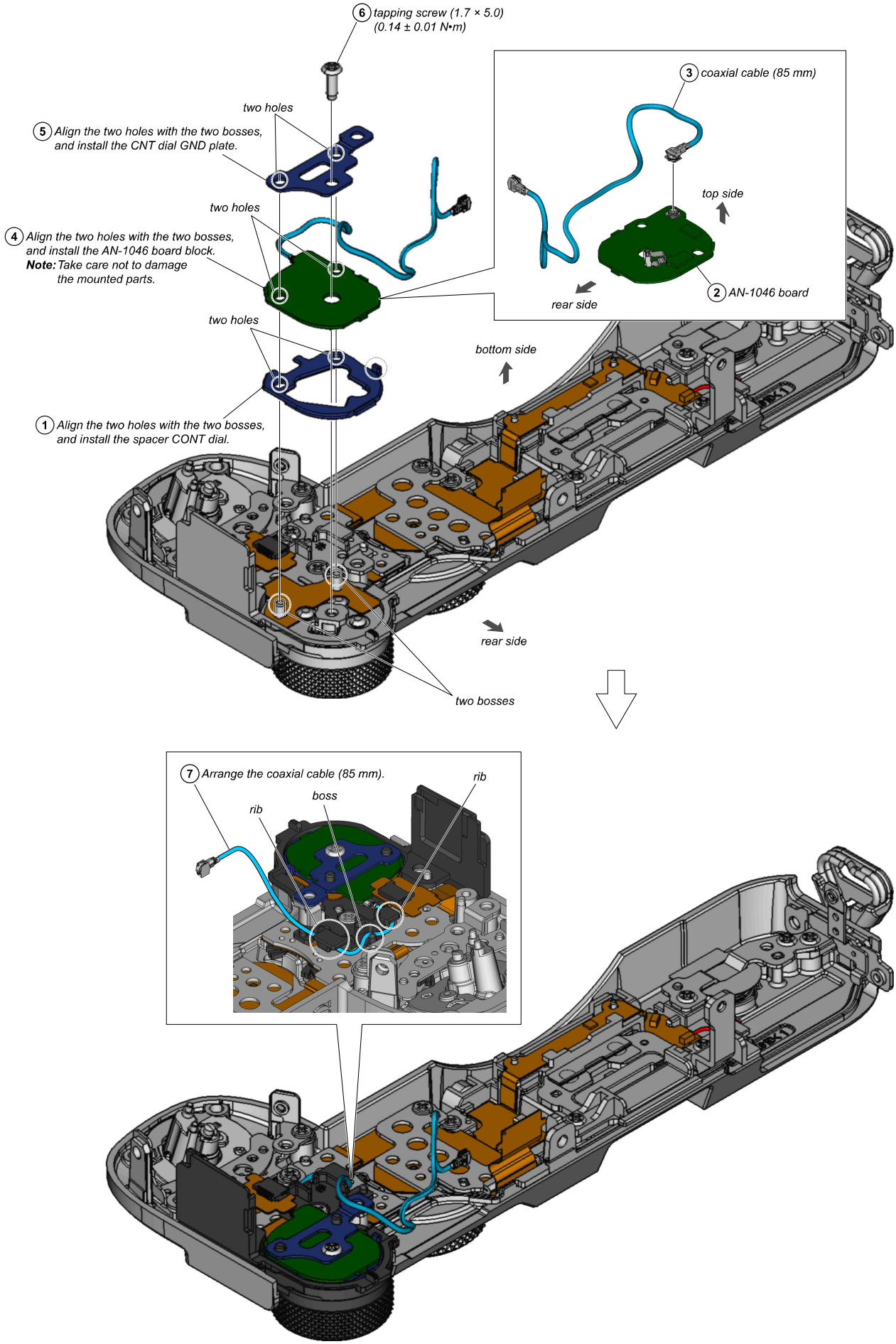
6 tapping screw (1.7 × 5.0)
(0.14 ± 0.01 N•m)
two holes
5 Align the two holes with the two bosses, and install the CNT dial GND plate.
two holes
4 Align the two holes with the two bosses, and install the AN-1046 board block.
Note: Take care not to damage the mounted parts.
two holes
1 Align the two holes with the two bosses, and install the spacer CONT dial.
3 coaxial cable (85 mm)
top side
2 AN-1046 board
rear side
bottom side
rear side
two bosses
7 Arrange the coaxial cable (85 mm).
rib
boss
rib

26. F DIAL ASSY

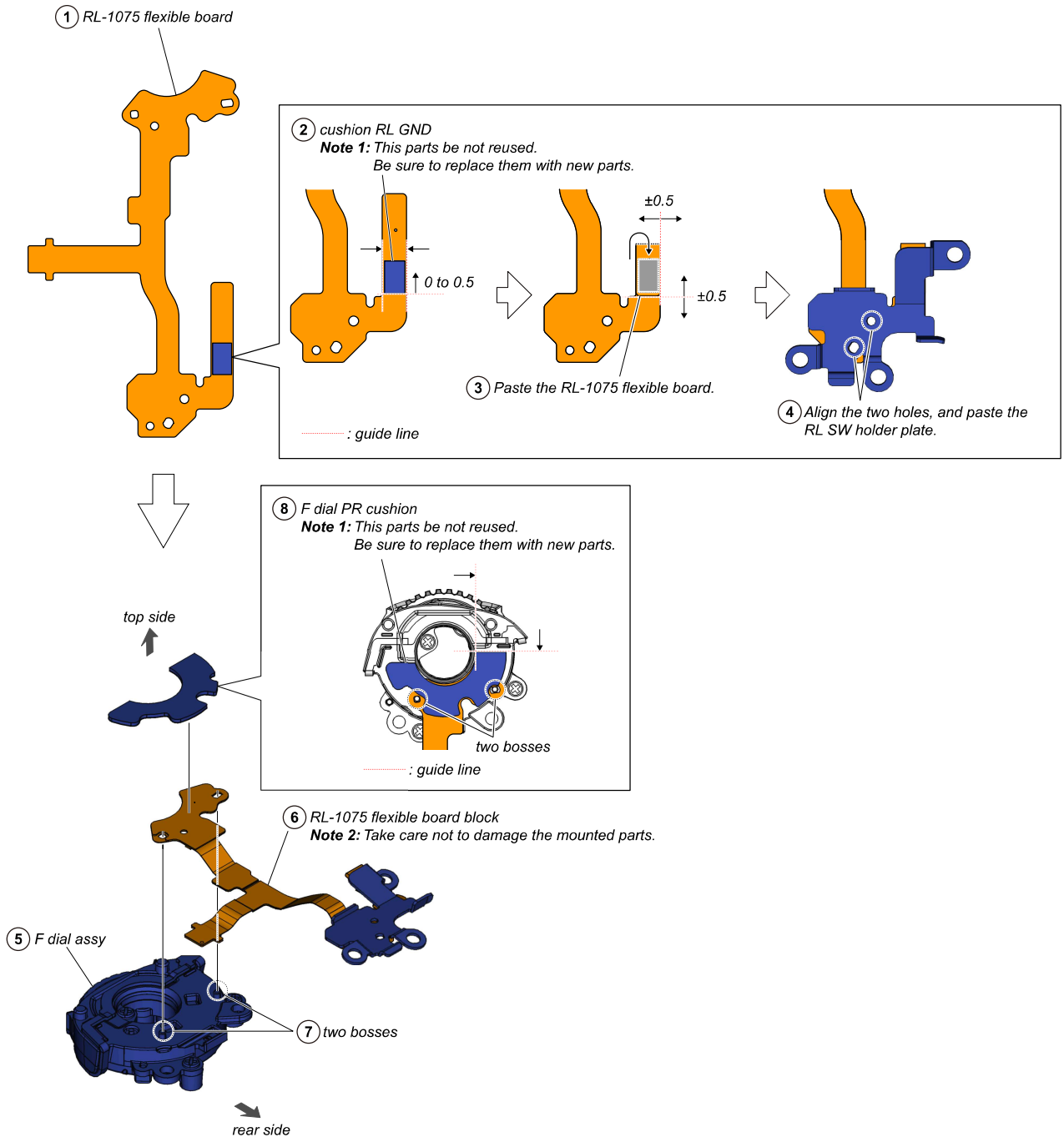

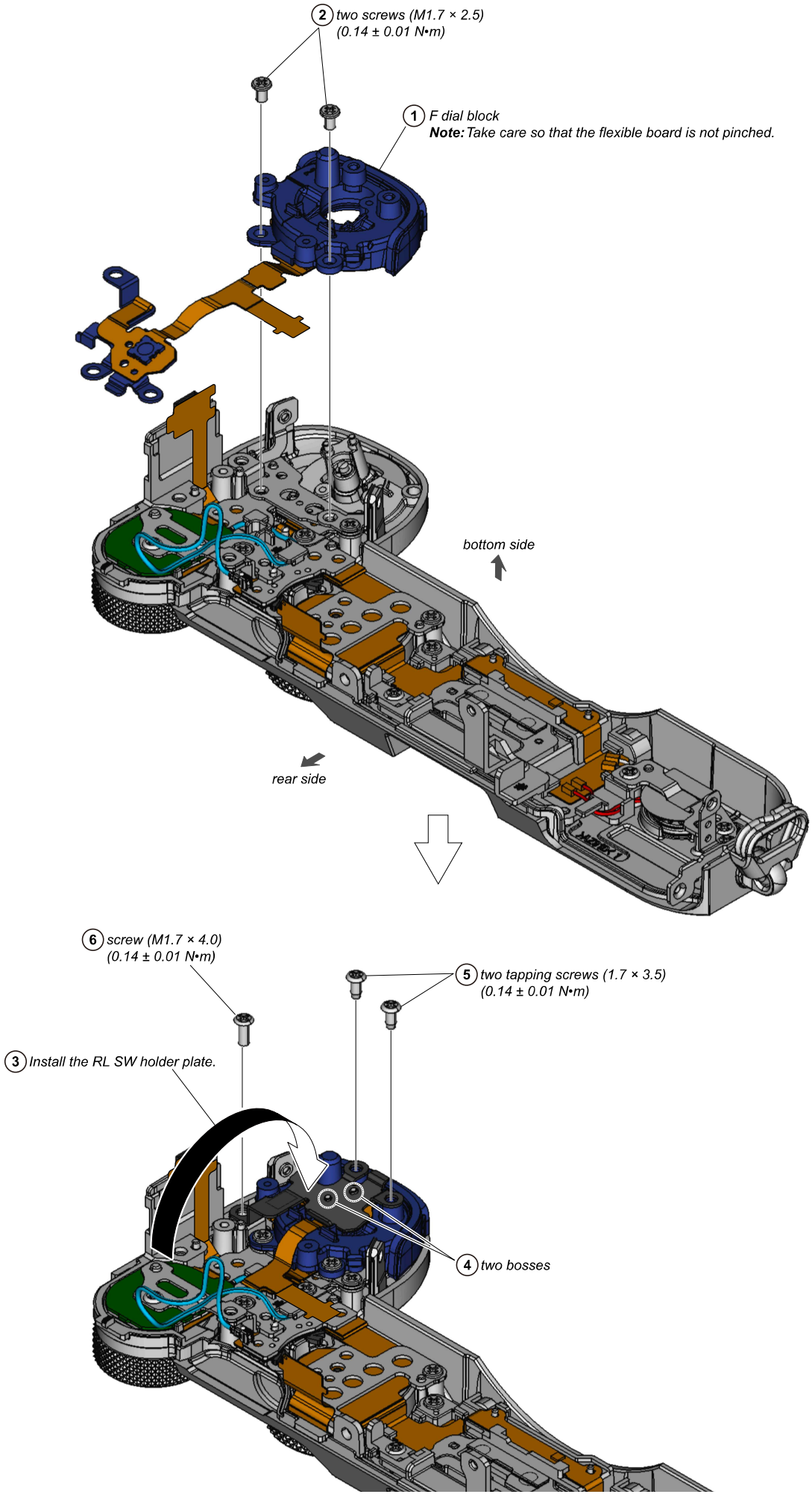
2 two screws (M1.7 × 2.5)
(0.14 ± 0.01 N•m)
1 F dial block
Note: Take care so that the flexible board is not pinched.
bottom side
rear side
6 screw (M1.7 × 4.0)
(0.14 ± 0.01 N•m)
5 two tapping screws (1.7 × 3.5)
(0.14 ± 0.01 N•m)
3 Install the RL SW holder plate.
4 two bosses

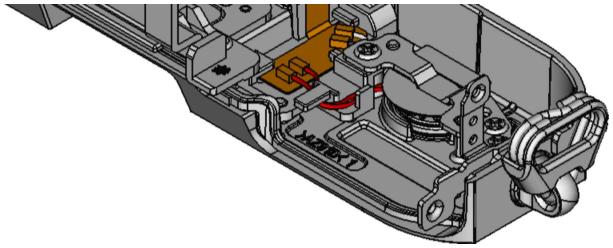

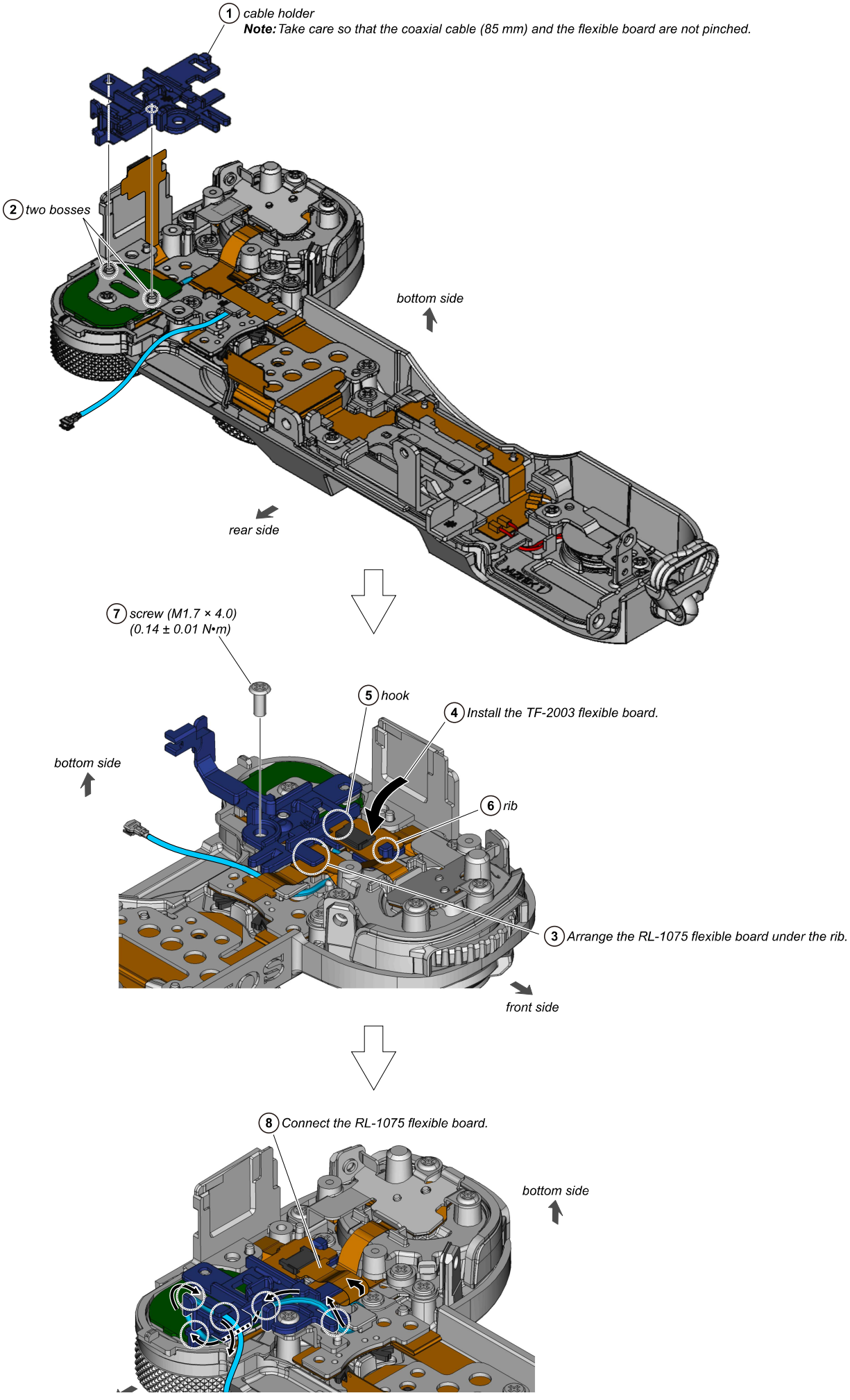
1 cable holder
Note: Take care so that the coaxial cable (85 mm) and the flexible board are not pinched.
2 two bosses
bottom side
rear side
7 screw (M1.7 × 4.0)
(0.14 ± 0.01 N•m)
5 hook
4 Install the TF-2003 flexible board.
bottom side
6 rib
3 Arrange the RL-1075 flexible board under the rib.
front side
8 Connect the RL-1075 flexible board.
bottom side

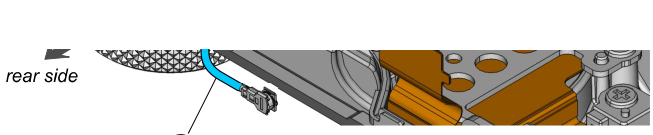

9 *Arrange the coaxial cable (85 mm).*

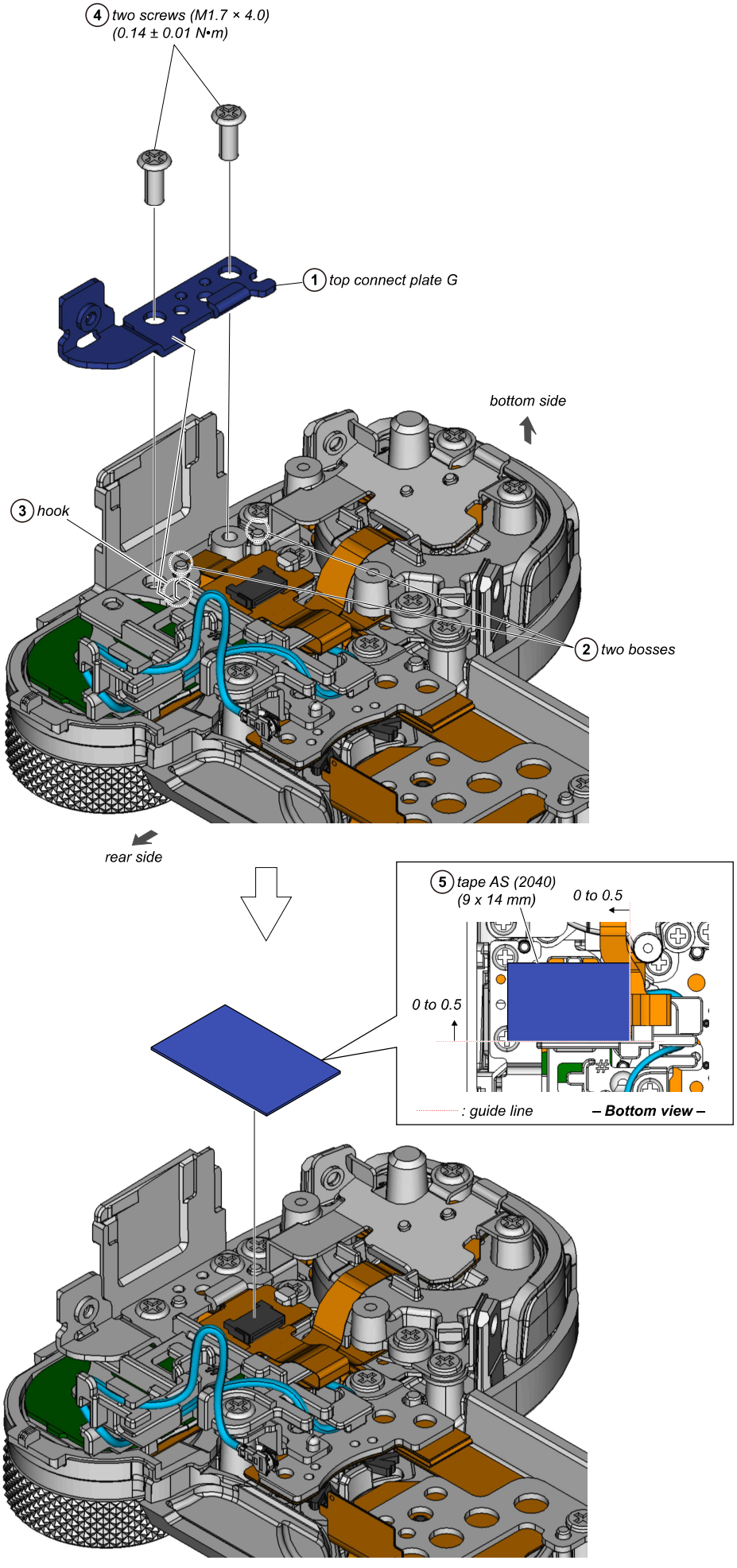
4 two screws (M1.7 × 4.0)
(0.14 ± 0.01 N•m)
1 top connect plate G
bottom side
3 hook
2 two bosses
rear side
5 tape AS (2040)
(9 x 14 mm)
0 to 0.5
0 to 0.5
: guide line
– Bottom view –

30. SHOE FPC WP CUSHION

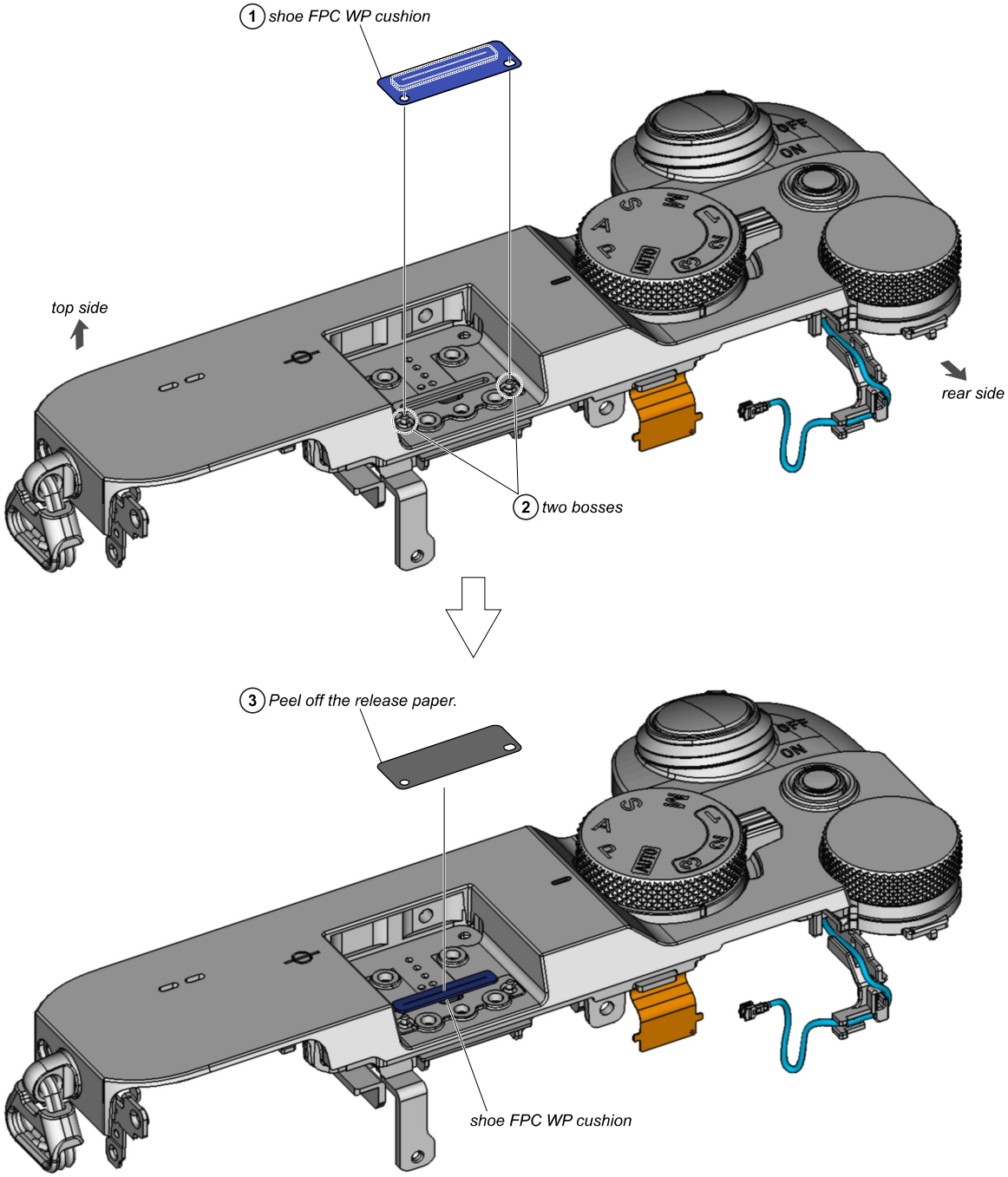

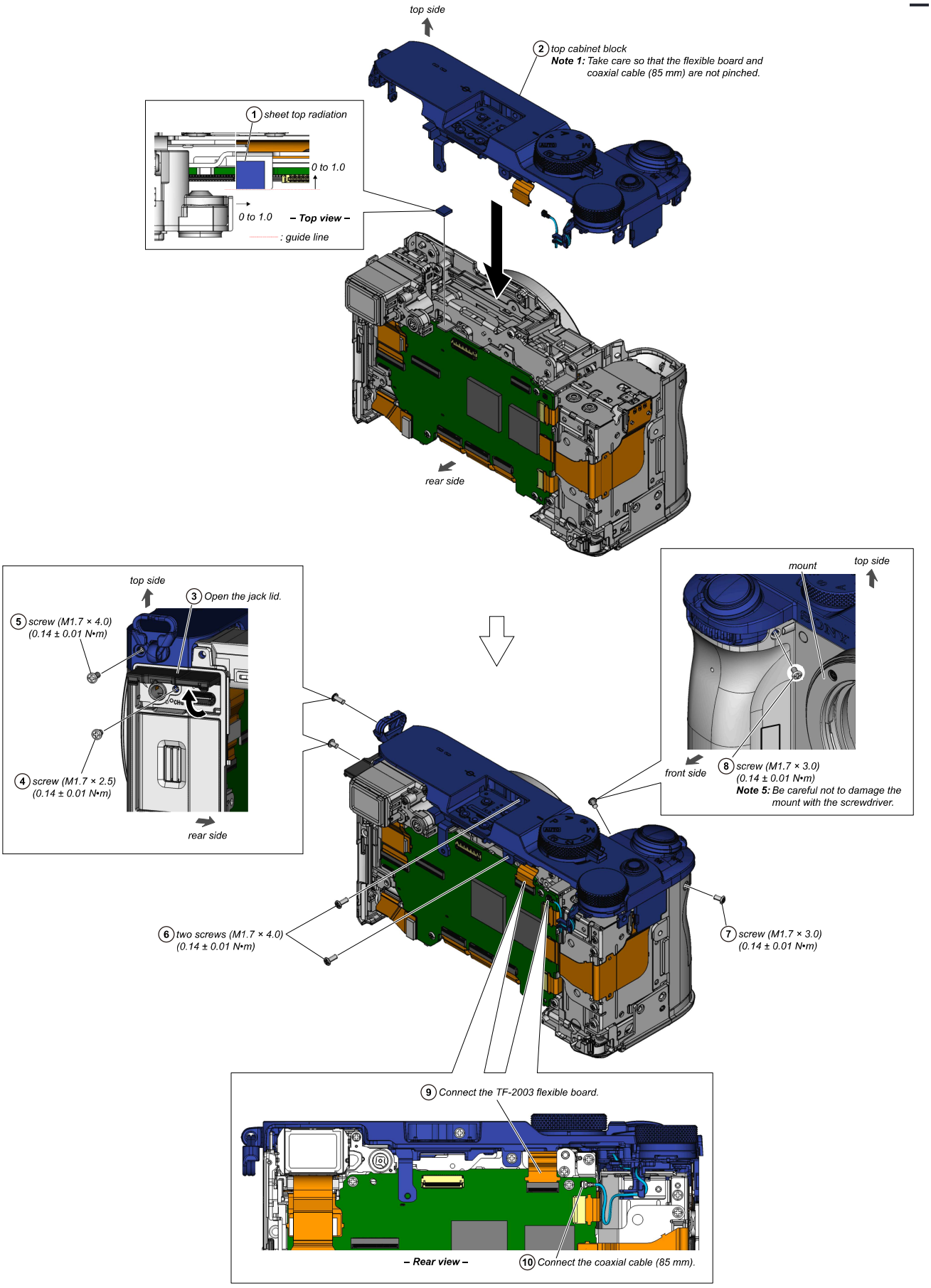
top side
2 top cabinet block
Note 1: Take care so that the flexible board and coaxial cable (85 mm) are not pinched.
1 sheet top radiation
0 to 1.0
0 to 1.0
– Top view –
: guide line
rear side
top side
3 Open the jack lid.
5 screw (M1.7 × 4.0) (0.14 ± 0.01 N•m)
4 screw (M1.7 × 2.5) (0.14 ± 0.01 N•m)
rear side
mount
top side
front side
8 screw (M1.7 × 3.0) (0.14 ± 0.01 N•m)
Note 5: Be careful not to damage the mount with the screwdriver.
6 two screws (M1.7 × 4.0) (0.14 ± 0.01 N•m)
7 screw (M1.7 × 3.0) (0.14 ± 0.01 N•m)
9 Connect the TF-2003 flexible board.
– Rear view –
10 Connect the coaxial cable (85 mm).

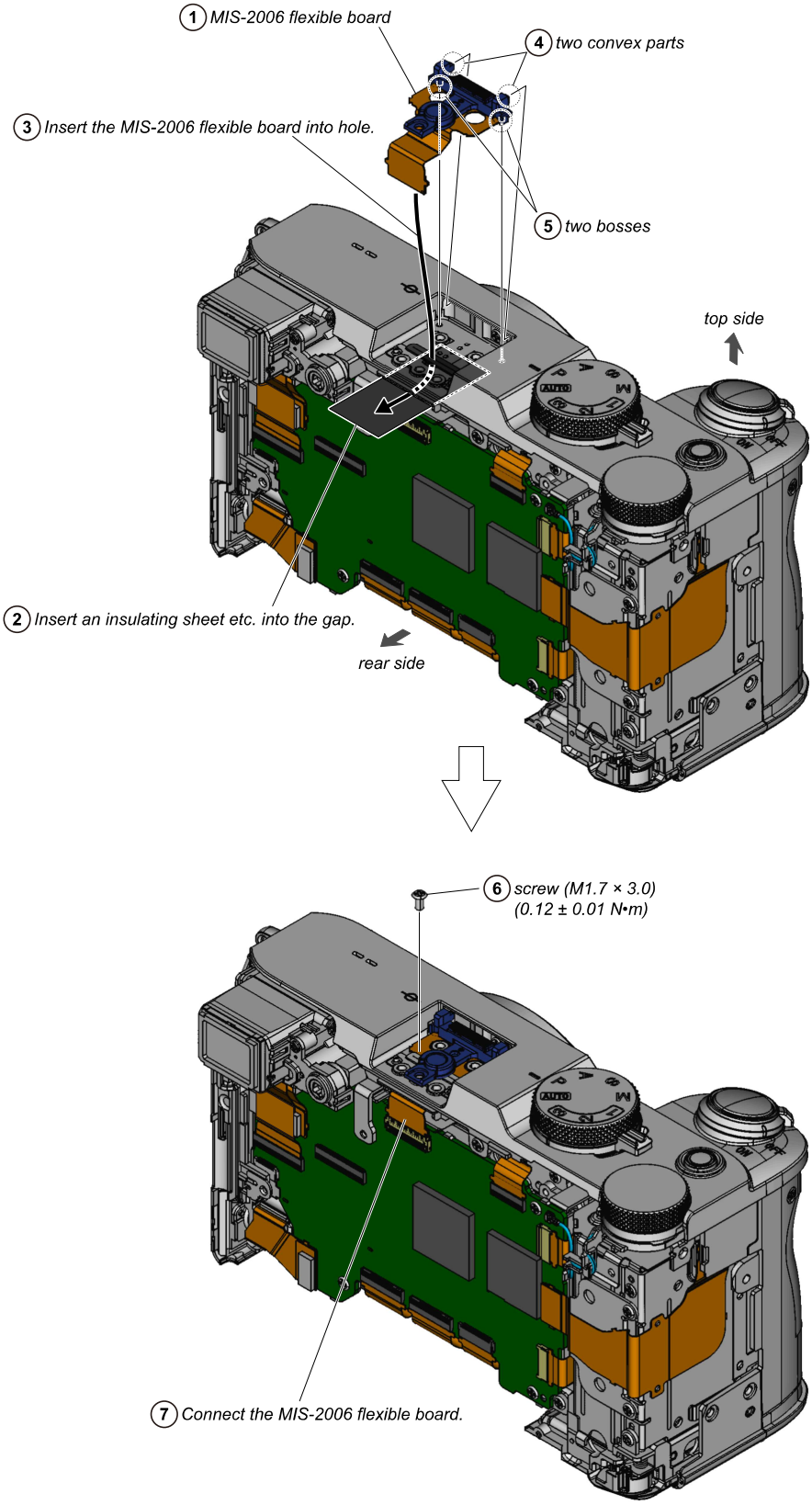
1 MIS-2006 flexible board
4 two convex parts
3 Insert the MIS-2006 flexible board into hole.
5 two bosses
top side
2 Insert an insulating sheet etc. into the gap.
rear side
6 screw (M1.7 × 3.0)
(0.12 ± 0.01 N•m)
7 Connect the MIS-2006 flexible board.

33. MI SHOE SHELL PLATE

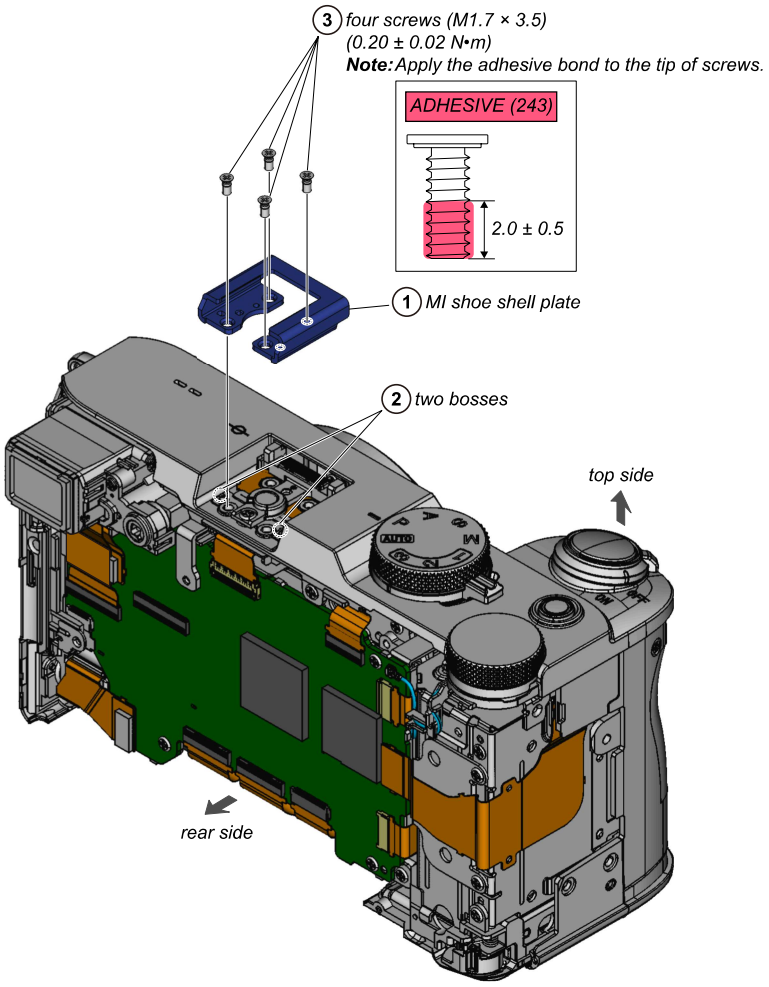

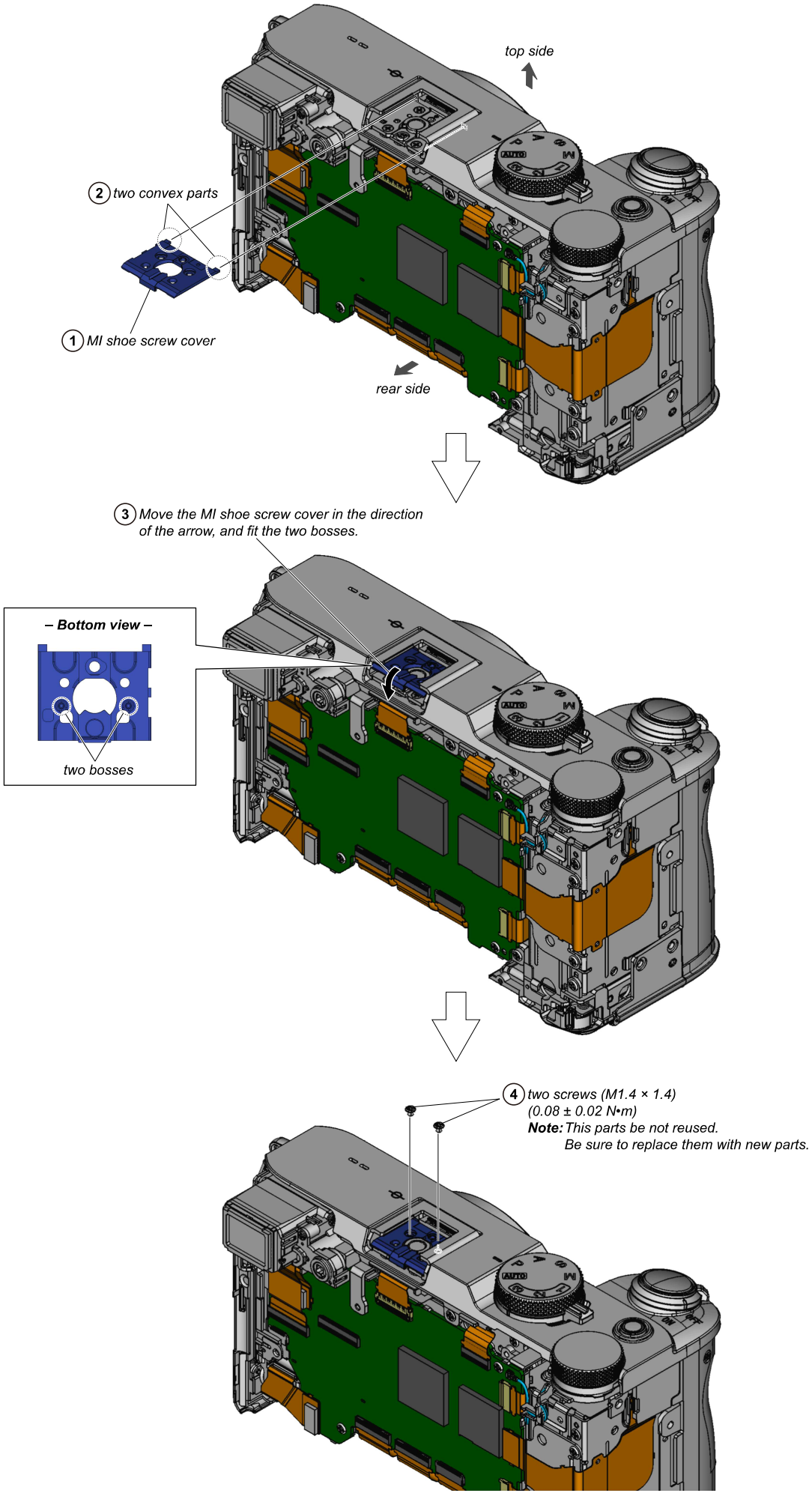
top side
2 two convex parts
1 MI shoe screw cover
rear side
3 Move the MI shoe screw cover in the direction of the arrow, and fit the two bosses.
– Bottom view –
two bosses
4 two screws (M1.4 × 1.4)
(0.08 ± 0.02 N•m)
Note: This parts be not reused.
Be sure to replace them with new parts.

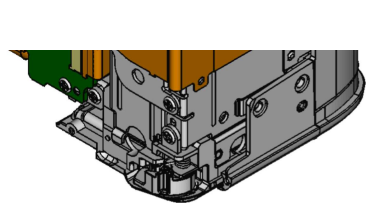

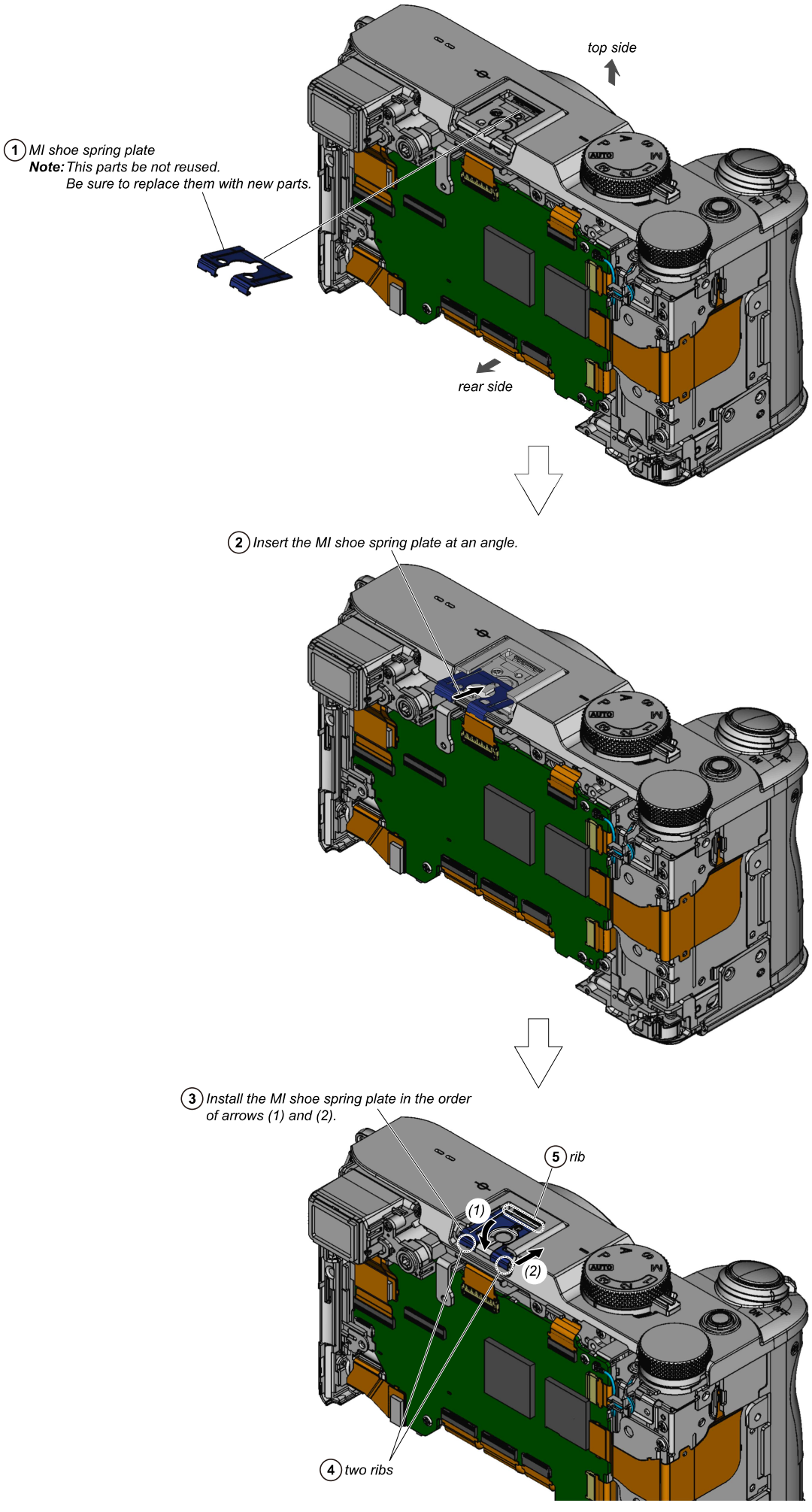
top side
1 MI shoe spring plate
Note: This parts be not reused.
Be sure to replace them with new parts.
rear side
2 Insert the MI shoe spring plate at an angle.
3 Install the MI shoe spring plate in the order of arrows (1) and (2).
5 rib
(1)
(2)
4 two ribs

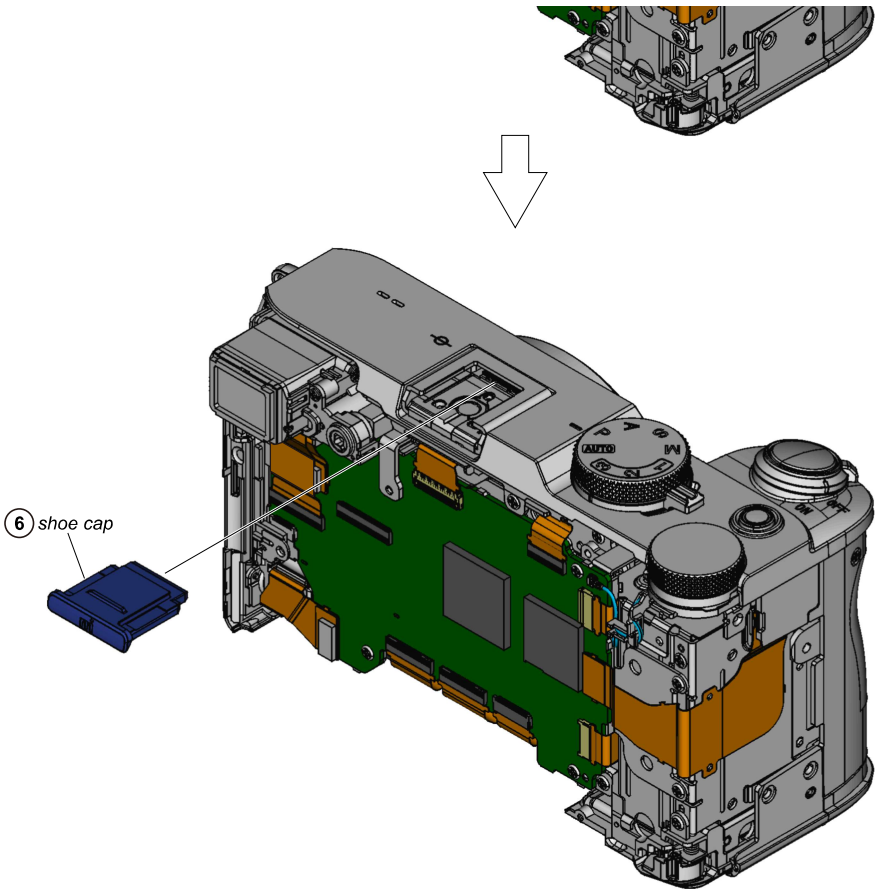
6 shoe cap

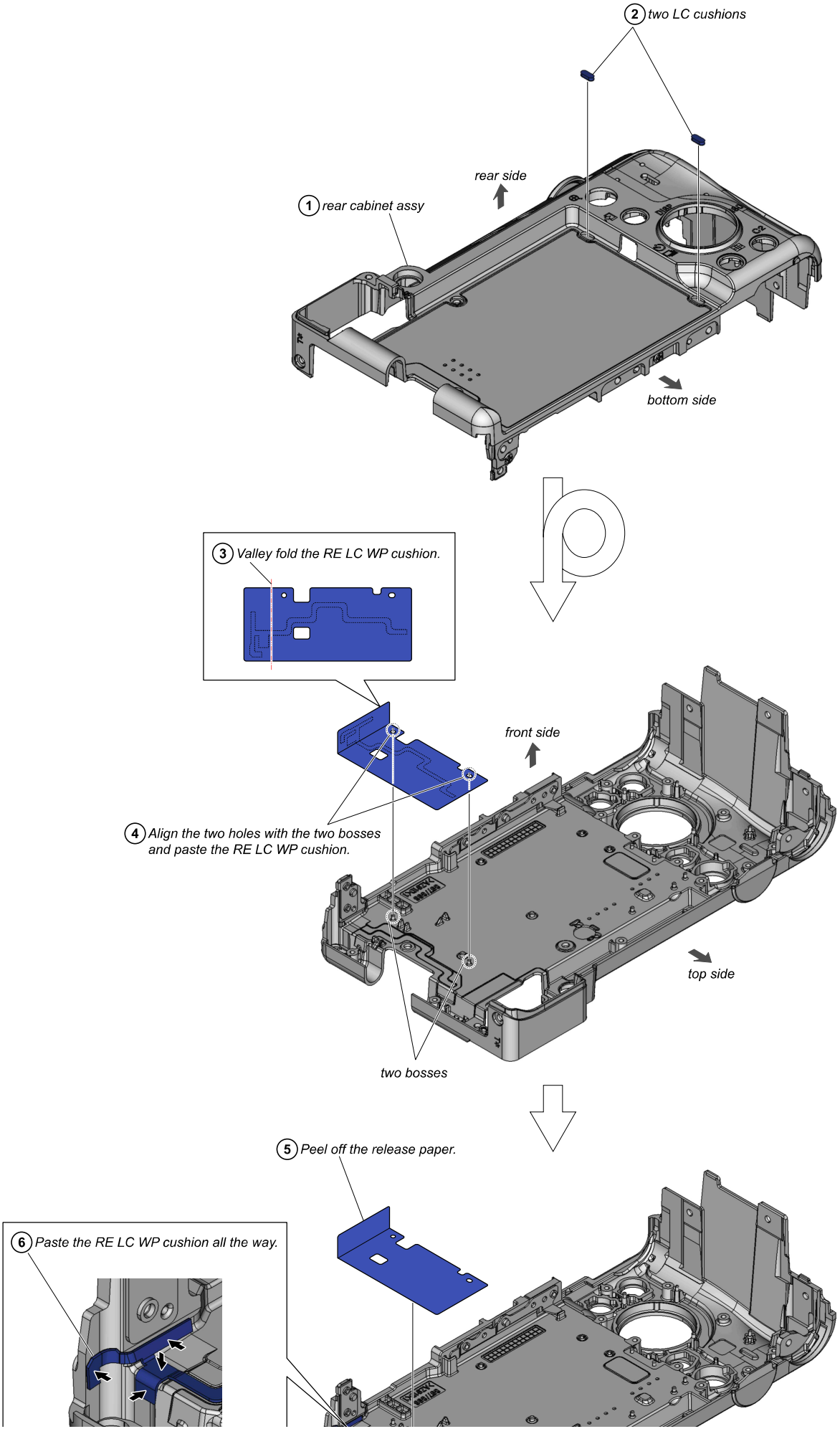
2 two LC cushions
rear side
1 rear cabinet assy
bottom side
3 Valley fold the RE LC WP cushion.
front side
4 Align the two holes with the two bosses
and paste the RE LC WP cushion.
top side
two bosses
5 Peel off the release paper.
6 Paste the RE LC WP cushion all the way.



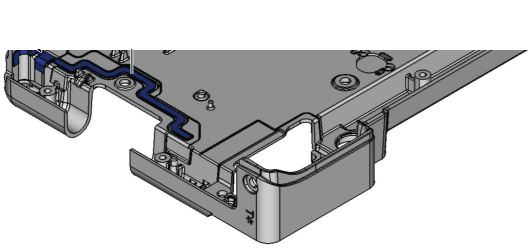

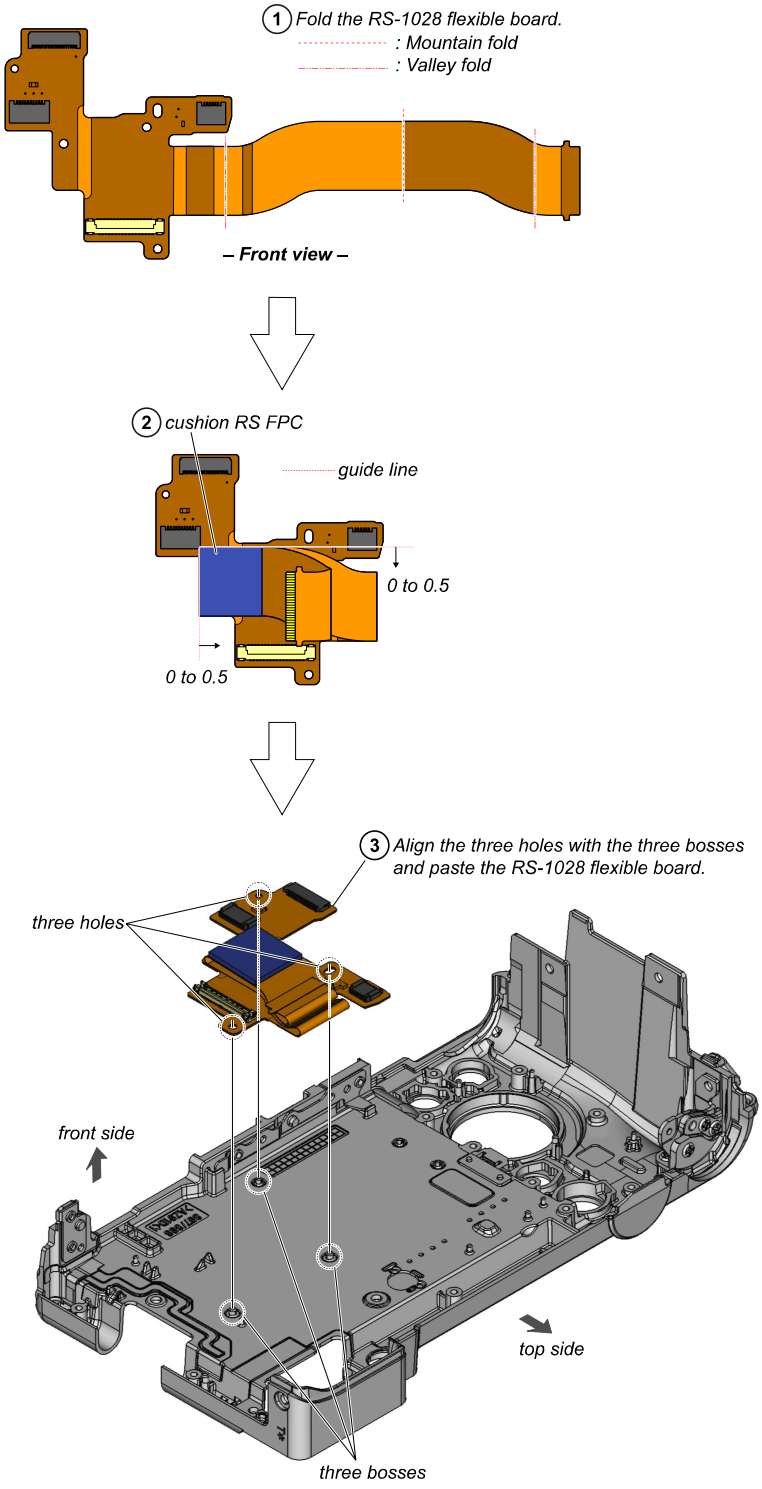
1 Fold the RS-1028 flexible board.
: Mountain fold
: Valley fold
– Front view –
2 cushion RS FPC
guide line
0 to 0.5
0 to 0.5
3 Align the three holes with the three bosses and paste the RS-1028 flexible board.
three holes
front side
top side
three bosses

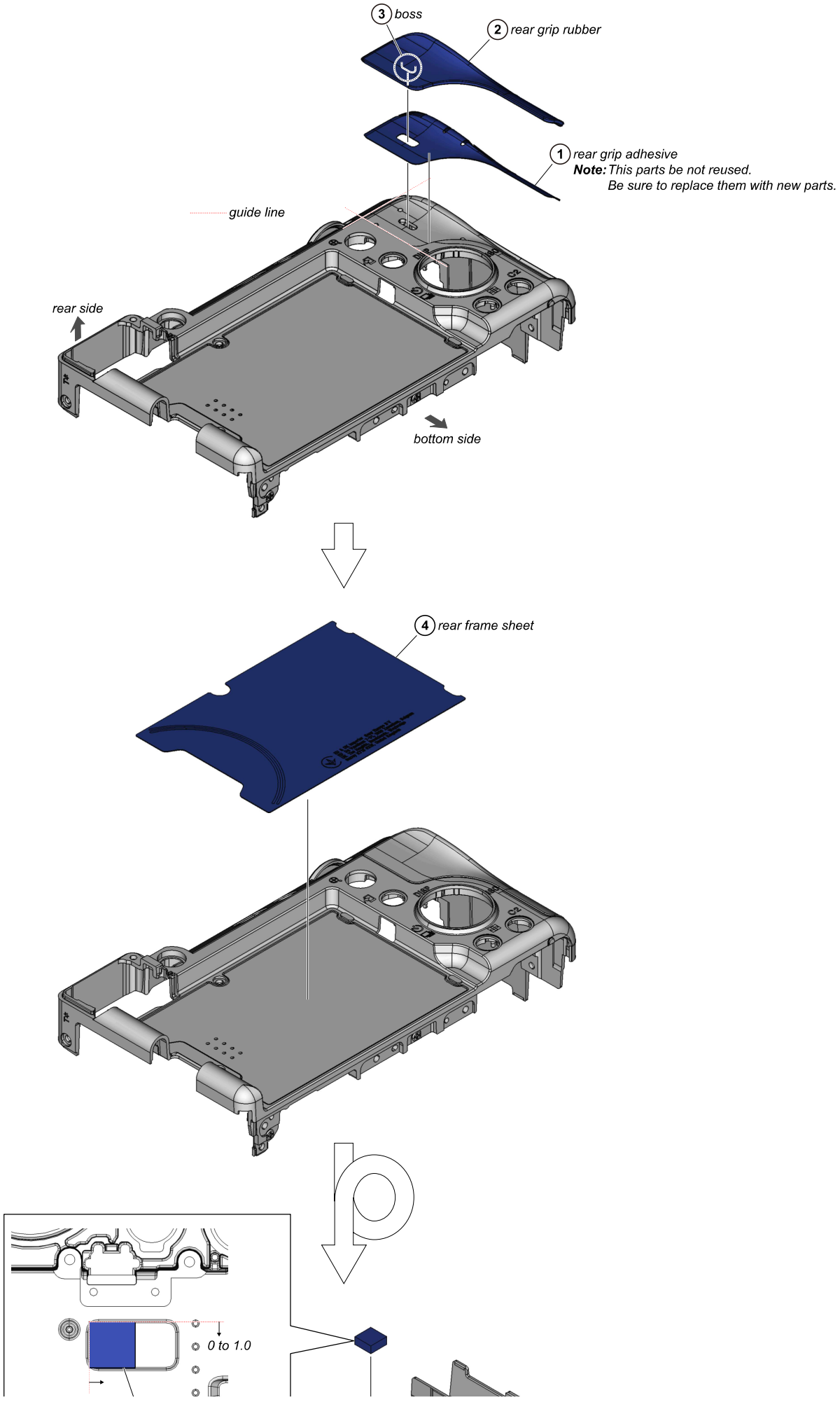
3 boss
2 rear grip rubber
1 rear grip adhesive
Note: This parts be not reused.
Be sure to replace them with new parts.
guide line
rear side
bottom side
4 rear frame sheet
0 to 1.0

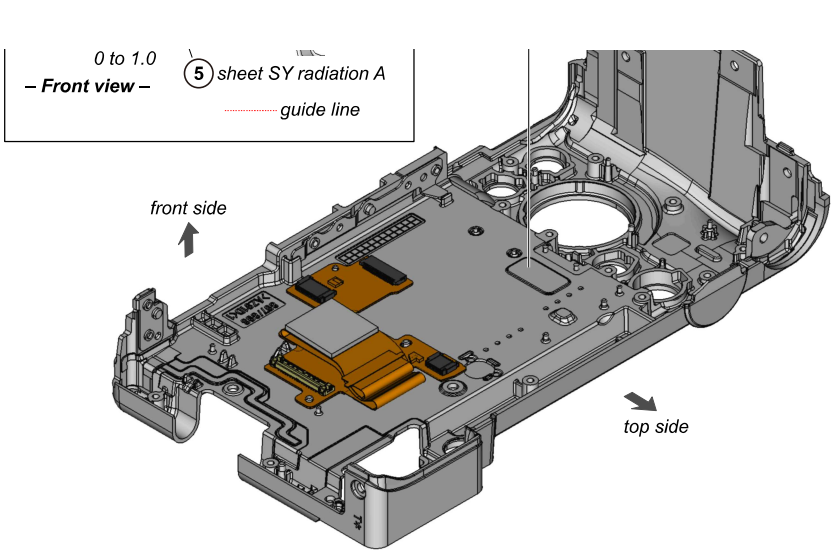
0 to 1.0
– Front view –
5 sheet SY radiation A
guide line
front side
top side

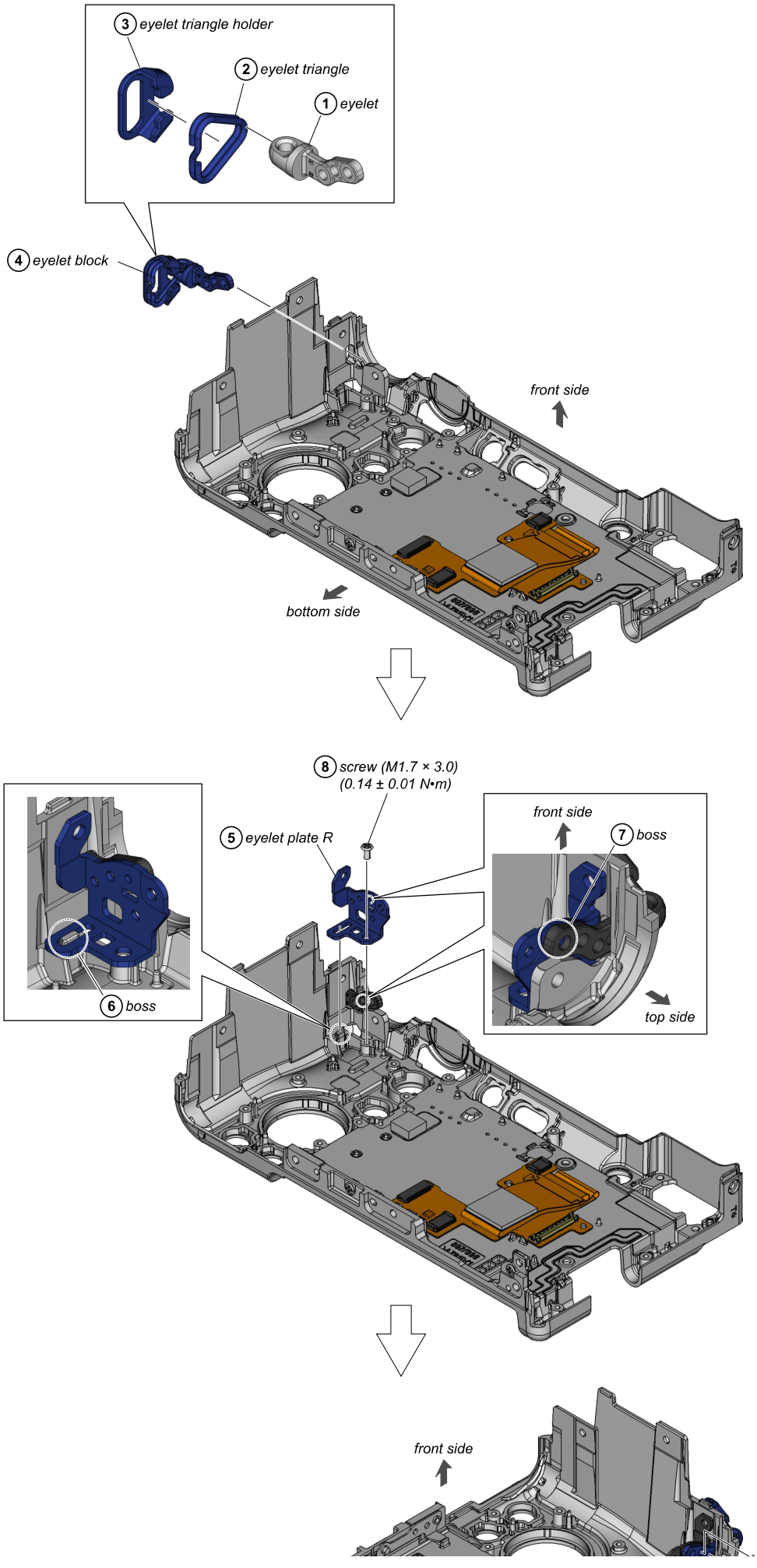
3 eyelet triangle holder
2 eyelet triangle
1 eyelet
4 eyelet block
front side
bottom side
8 screw (M1.7 × 3.0)
(0.14 ± 0.01 N•m)
5 eyelet plate R
front side
7 boss
top side
6 boss
front side

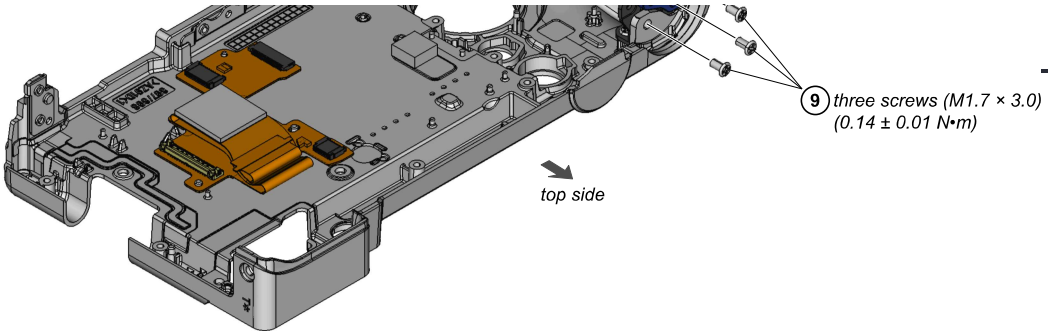
9 three screws (M1.7 × 3.0)
(0.14 ± 0.01 N•m)
top side

40. CLAW LC LOCK

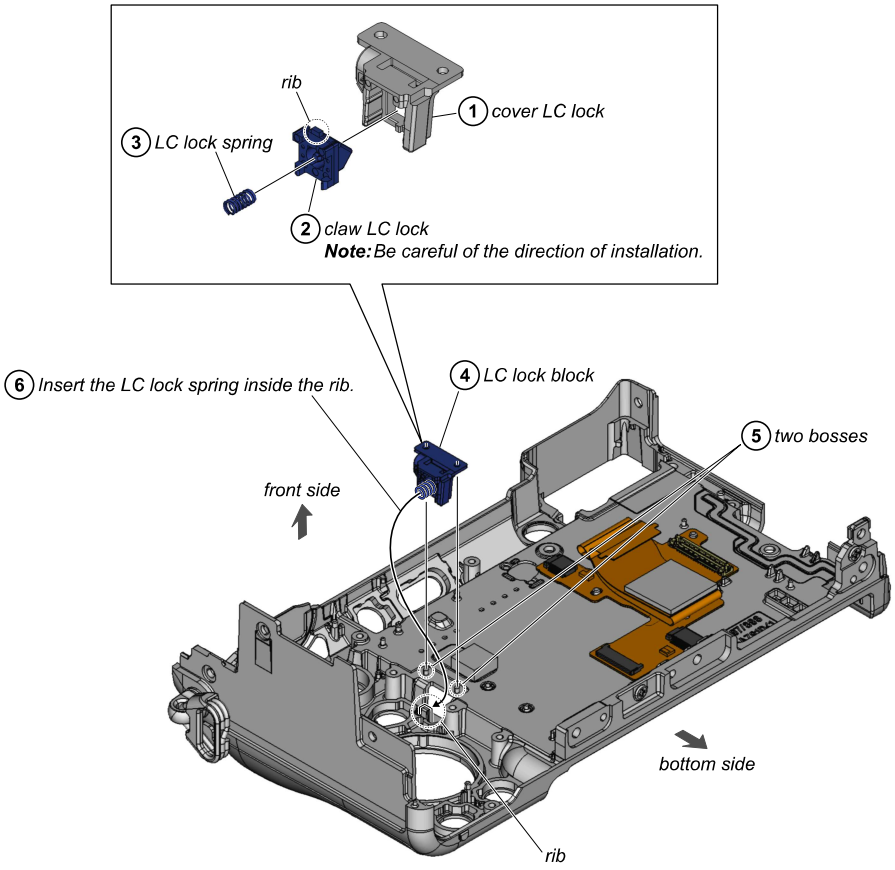

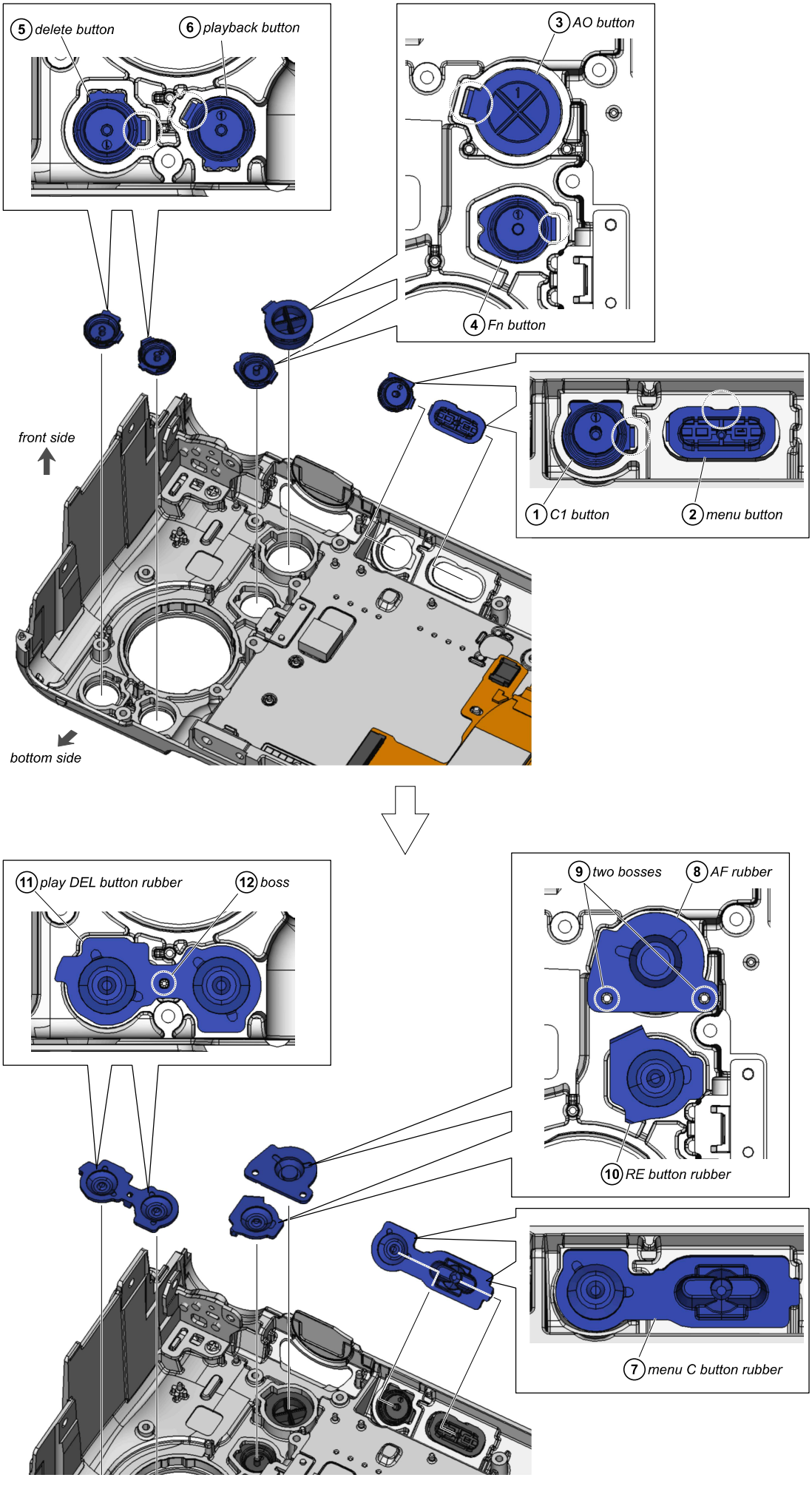
5 delete button
6 playback button
3 AO button
4 Fn button
front side
1 C1 button
2 menu button
bottom side
11 play DEL button rubber
12 boss
9 two bosses
8 AF rubber
10 RE button rubber
7 menu C button rubber

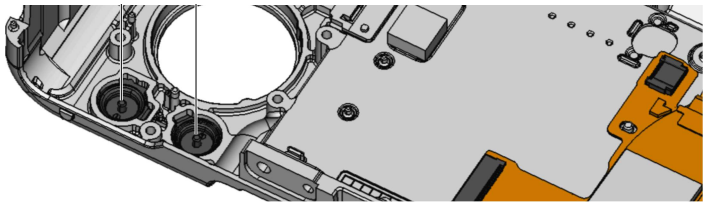

42. CONTROL SWITCH BLOCK (BK88100)

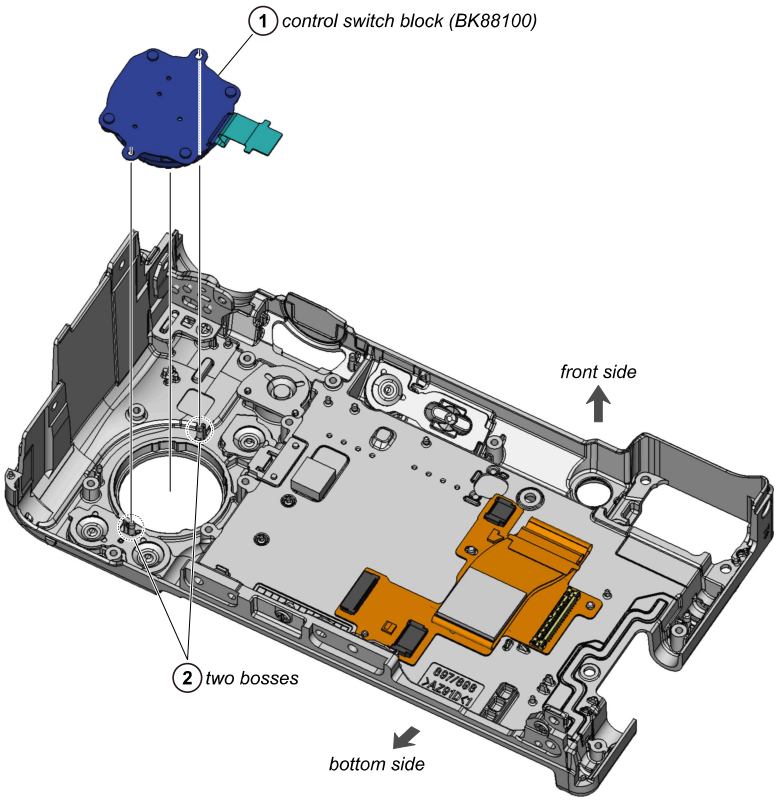

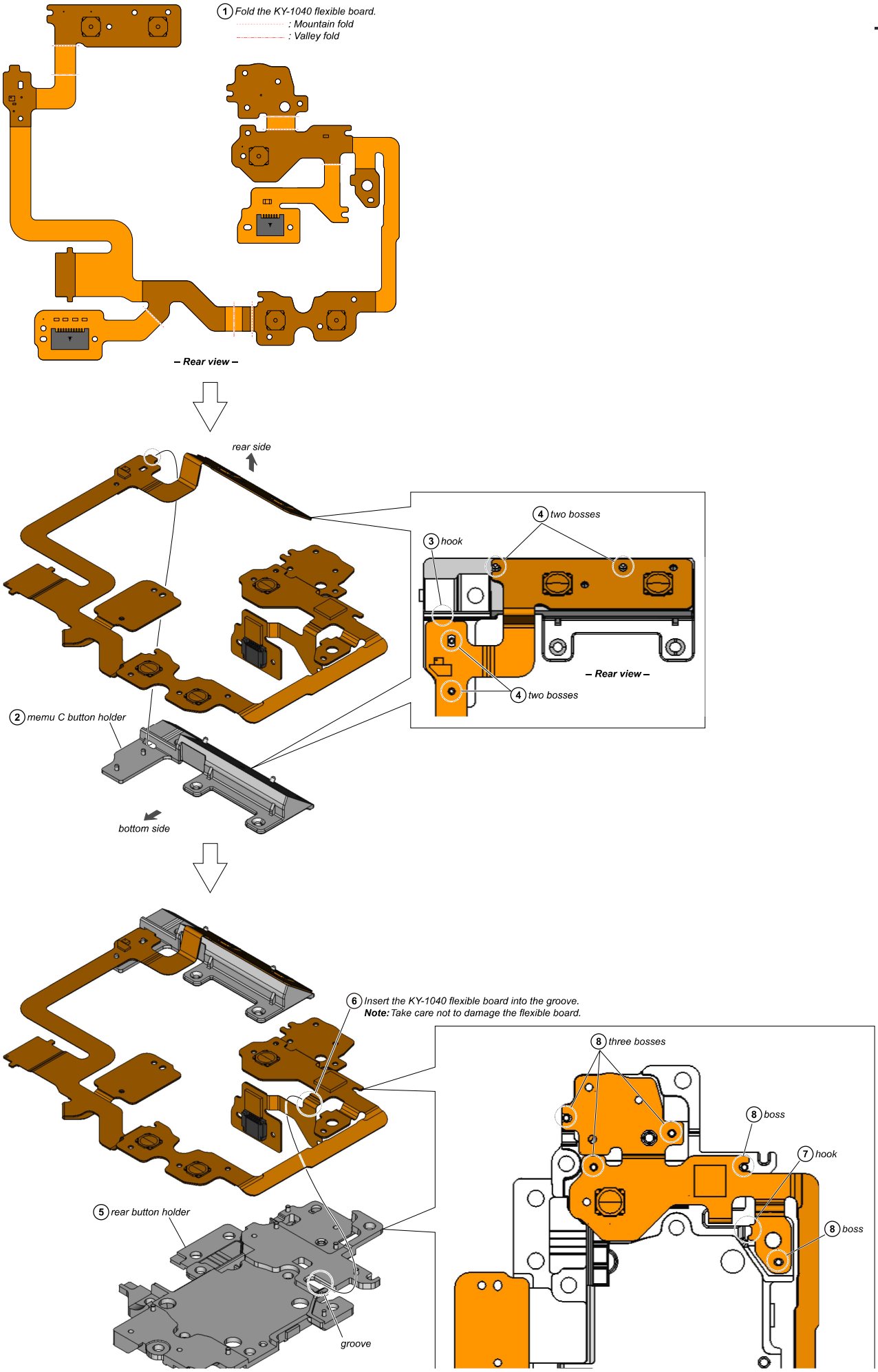
1 Fold the KY-1040 flexible board.
: Mountain fold
: Valley fold
– Rear view –
rear side
4 two bosses
3 hook
4 two bosses
– Rear view –
2 memu C button holder
bottom side
6 Insert the KY-1040 flexible board into the groove.
Note: Take care not to damage the flexible board.
8 three bosses
8 boss
7 hook
8 boss
5 rear button holder
groove

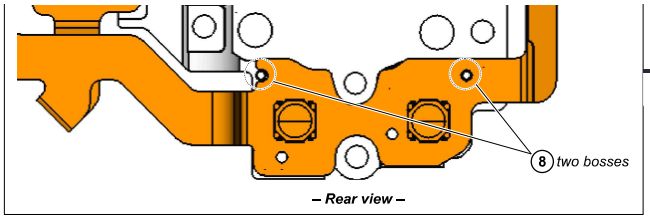
8 two bosses
– Rear view –

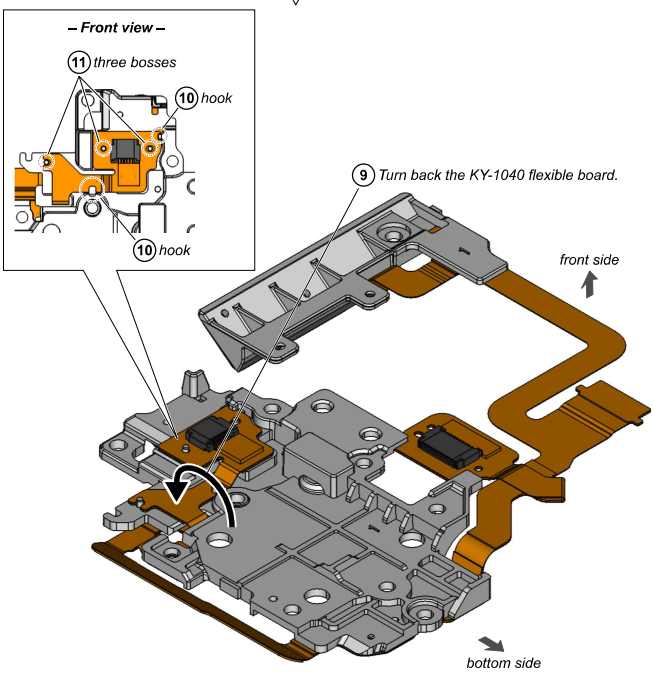
– Front view –
11 three bosses
10 hook
10 hook
9 Turn back the KY-1040 flexible board.
front side
bottom side

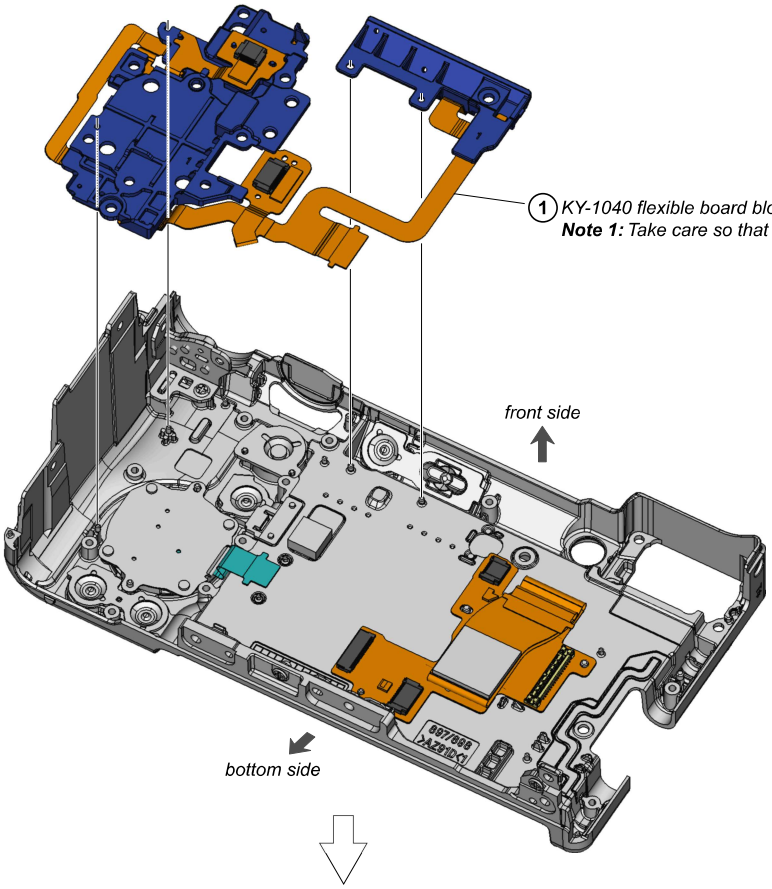

① *KY-1040 flexible board block*

Note 1: *Take care so that the flexible board is not pinched.*

– Front view –

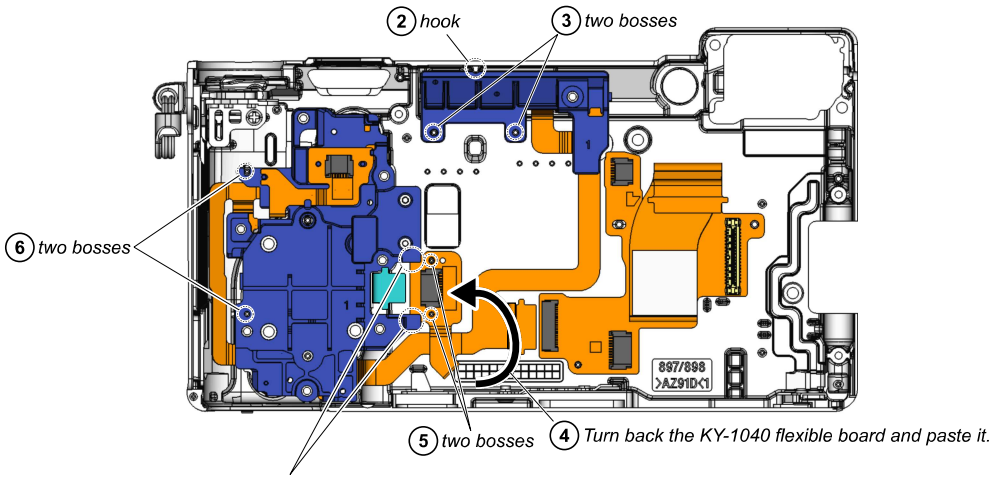

Note 2: *The KY-1040 flexible board must be under the rear button holder.*

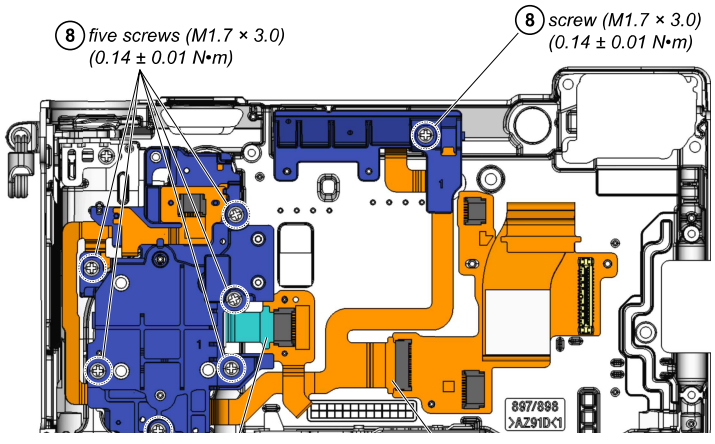

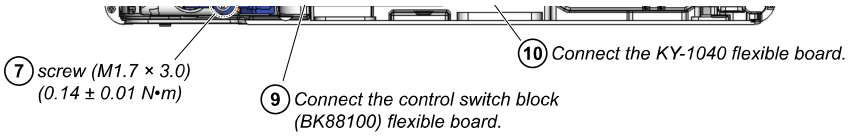
7 screw (M1.7 × 3.0)
(0.14 ± 0.01 N•m)
9 Connect the control switch block
(BK88100) flexible board.
10 Connect the KY-1040 flexible board.

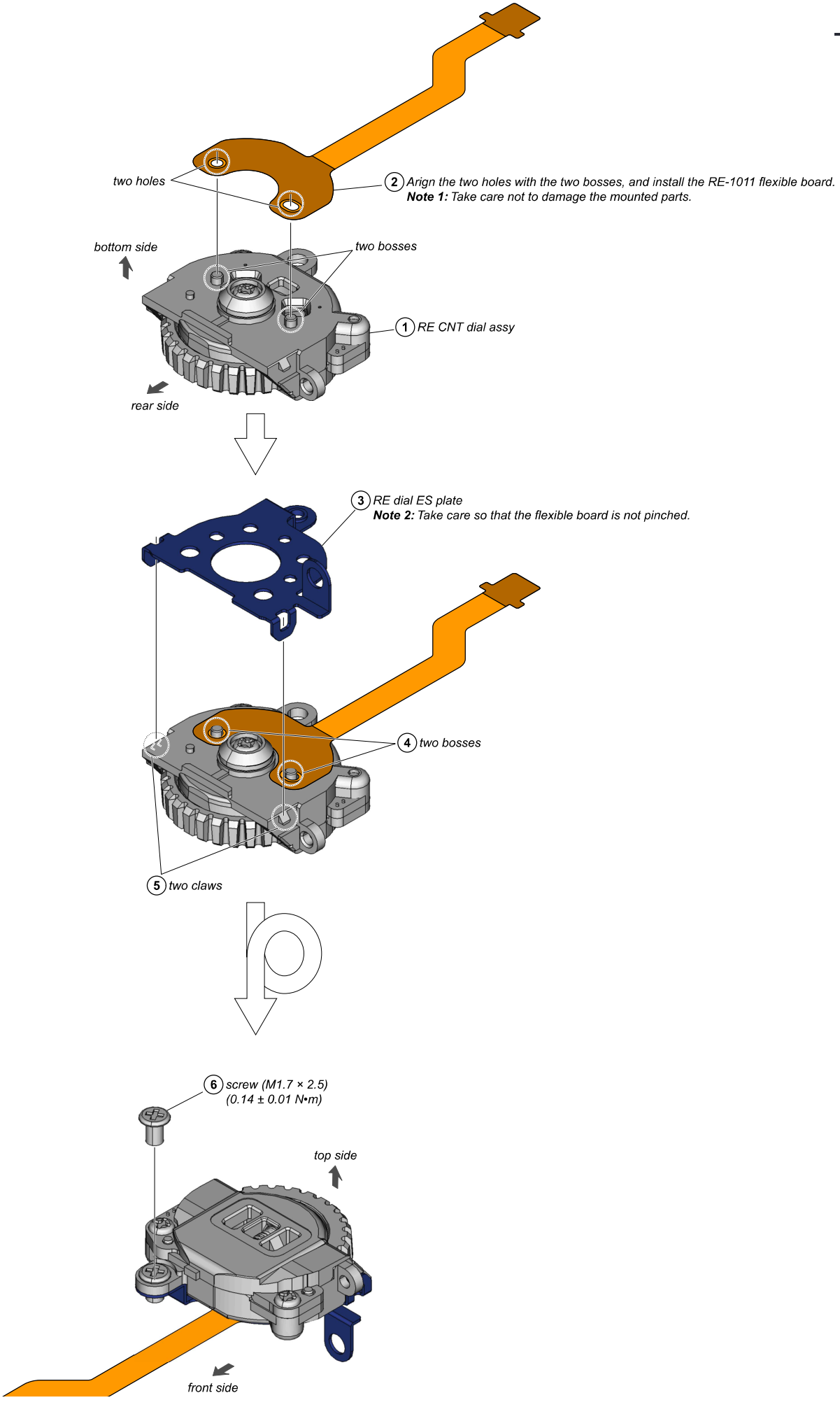
two holes
2 Arign the two holes with the two bosses, and install the RE-1011 flexible board.
Note 1: Take care not to damage the mounted parts.
bottom side
two bosses
1 RE CNT dial assy
rear side
3 RE dial ES plate
Note 2: Take care so that the flexible board is not pinched.
4 two bosses
5 two claws
6 screw (M1.7 × 2.5)
(0.14 ± 0.01 N•m)
top side
front side



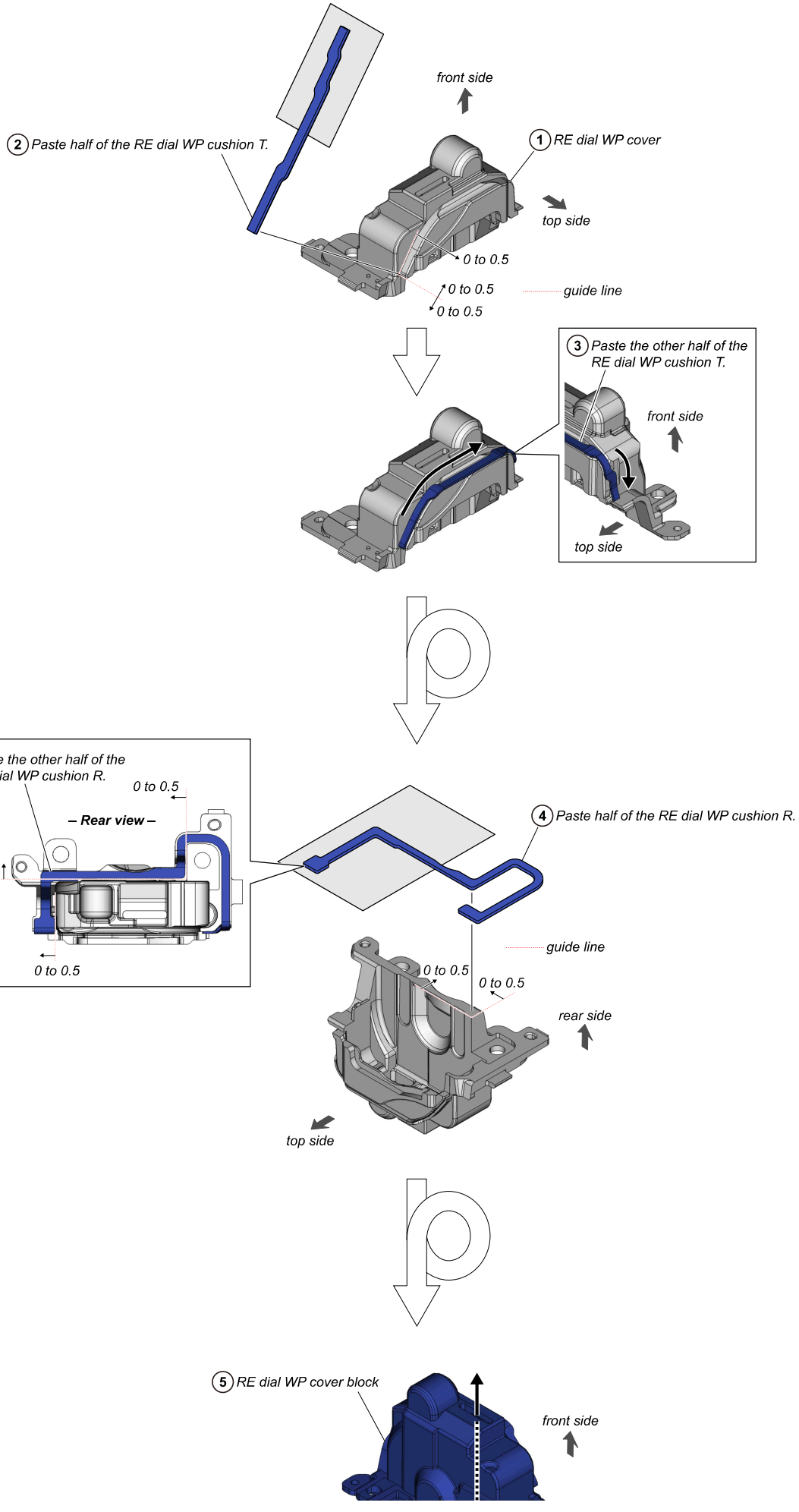
front side
2 Paste half of the RE dial WP cushion T.
1 RE dial WP cover
top side
0 to 0.5
0 to 0.5
guide line
0 to 0.5
3 Paste the other half of the RE dial WP cushion T.
front side
top side
5 Paste the other half of the RE dial WP cushion R.
0 to 0.5
– Rear view –
0 to 0.5
0 to 0.5
4 Paste half of the RE dial WP cushion R.
guide line
0 to 0.5
0 to 0.5
rear side
top side
5 RE dial WP cover block
front side

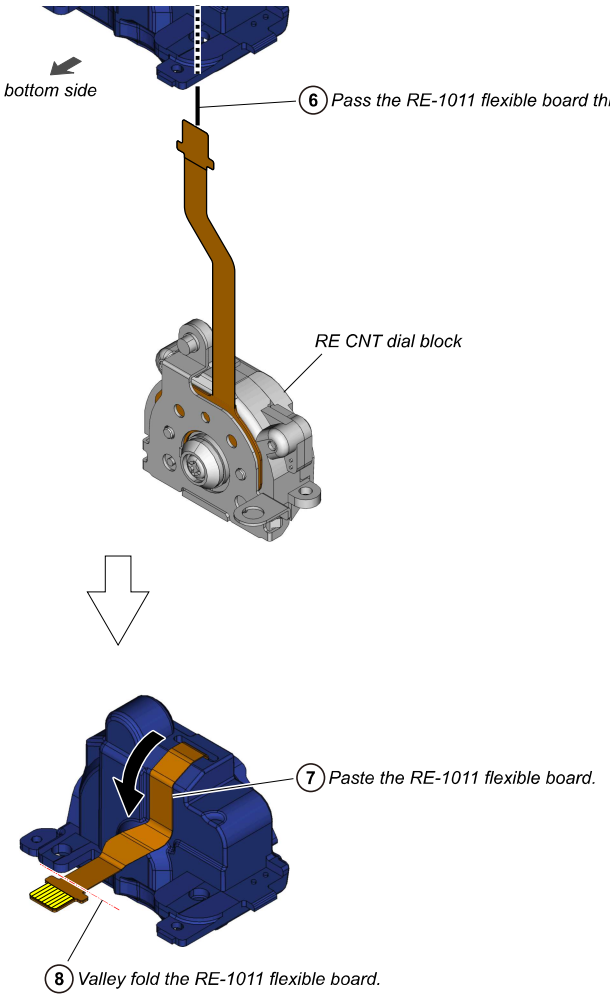
bottom side
6 Pass the RE-1011 flexible board through the hole.
RE CNT dial block
7 Paste the RE-1011 flexible board.
8 Valley fold the RE-1011 flexible board.

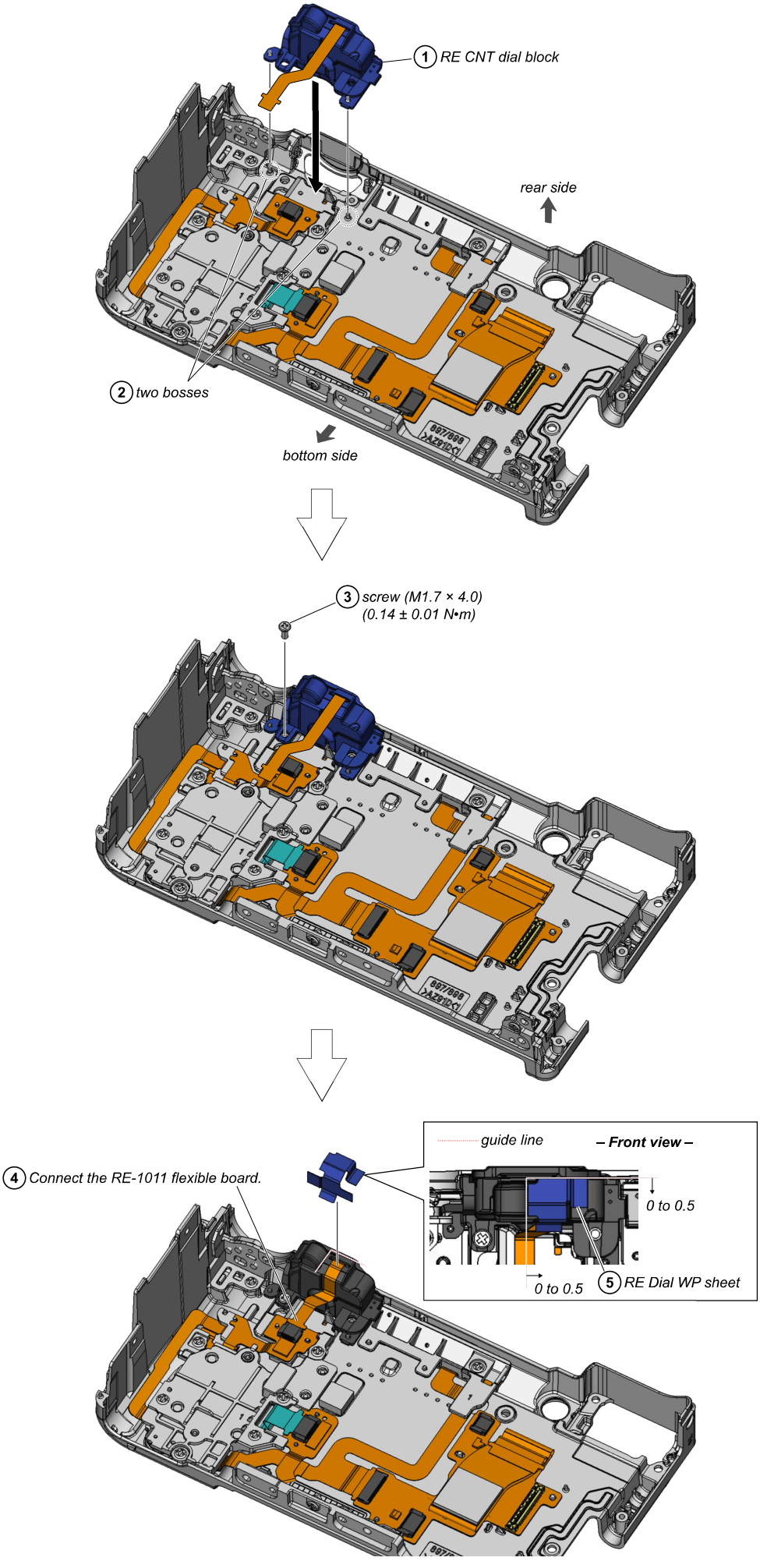
1 RE CNT dial block
rear side
2 two bosses
bottom side
3 screw (M1.7 × 4.0)
(0.14 ± 0.01 N•m)
4 Connect the RE-1011 flexible board.
guide line
– Front view –
0 to 0.5
0 to 0.5
5 RE Dial WP sheet

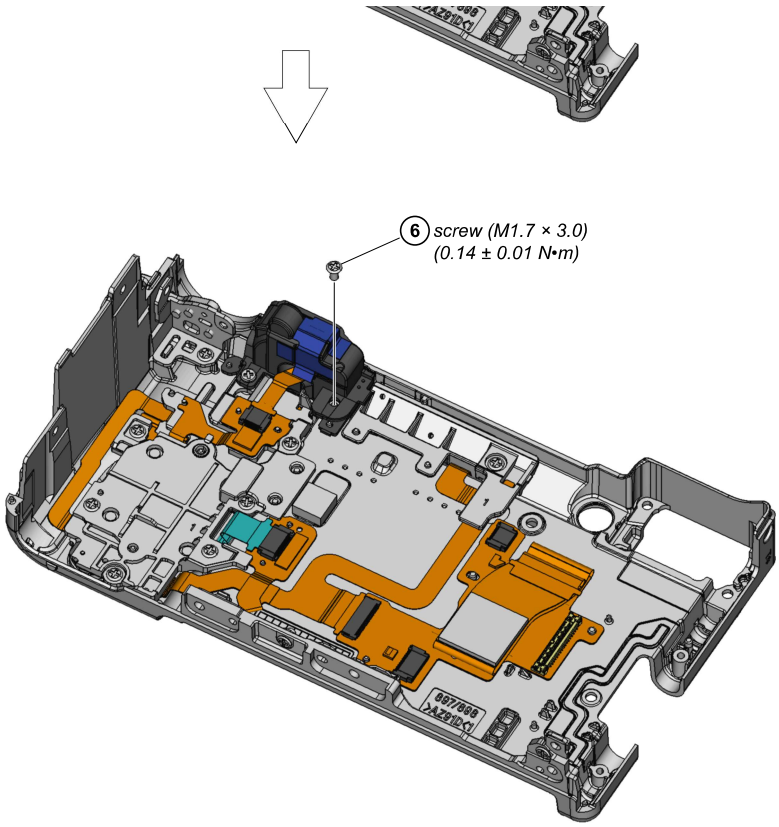
6 screw (M1.7 × 3.0)
(0.14 ± 0.01 N•m)

48. ES-1012 FLEXIBLE BOARD (not supplied)

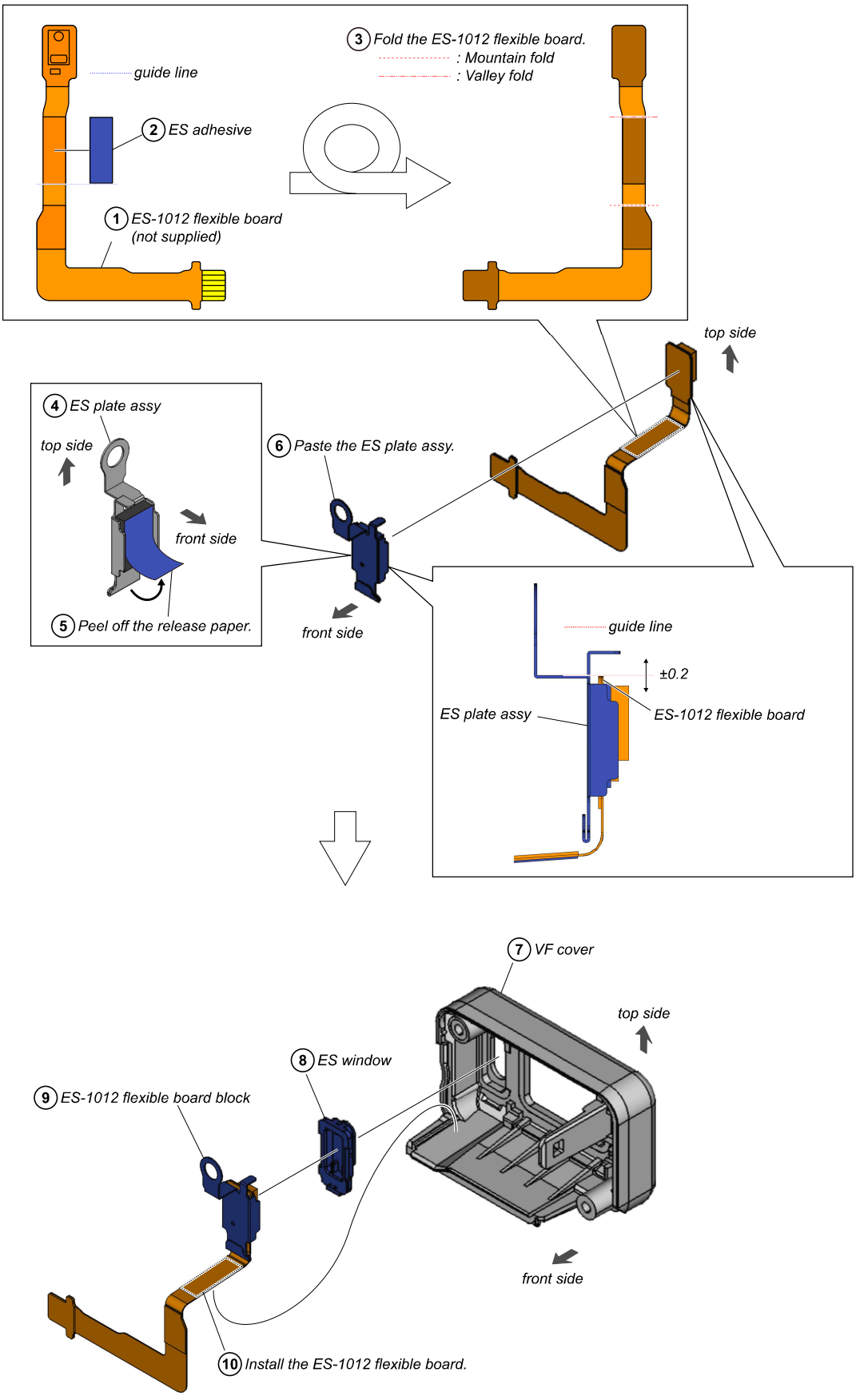

49. VF COVER BLOCK

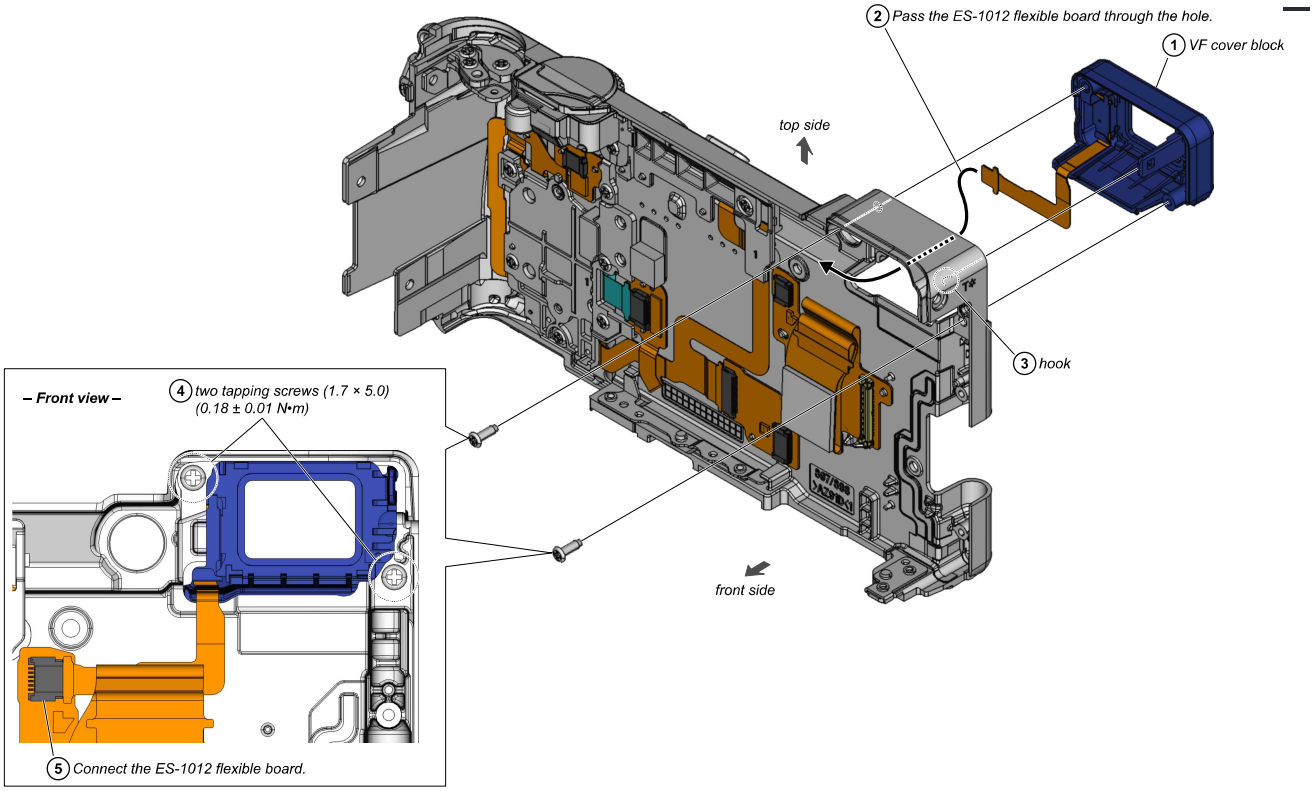

50. SENSOR MAGNET

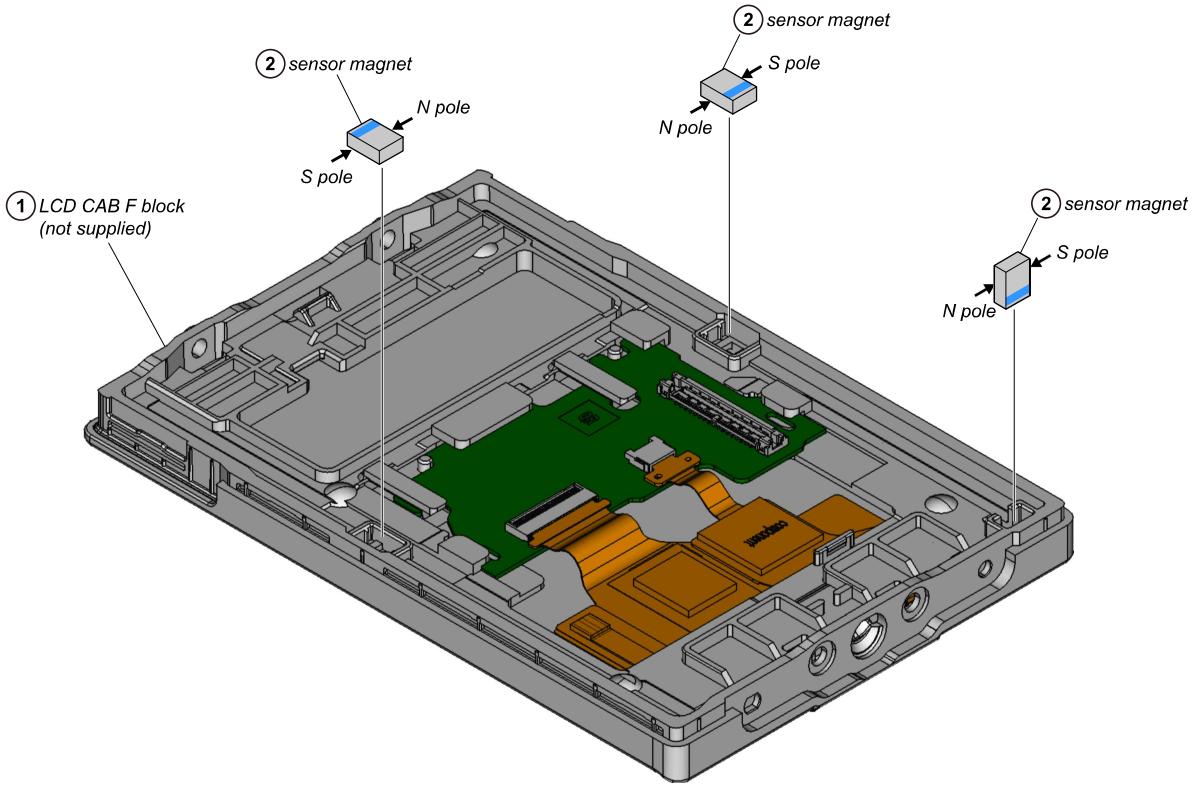

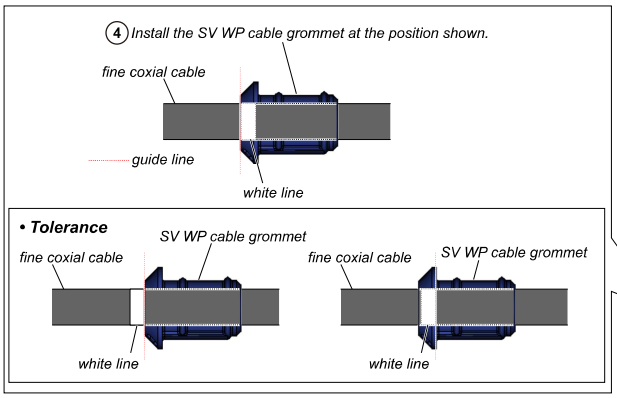
4 Install the SV WP cable grommet at the position shown.
fine coxial cable
guide line
white line
• Tolerance
SV WP cable grommet
fine coxial cable
white line
fine coxial cable
SV WP cable grommet
white line

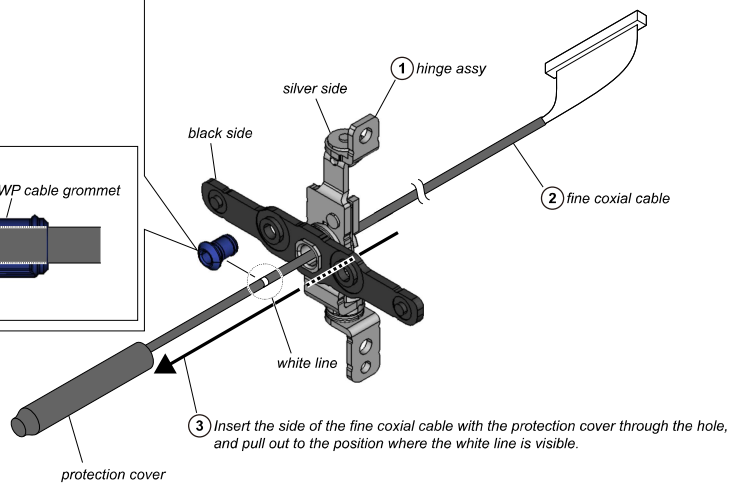
1 hinge assy
silver side
black side
2 fine coxial cable
white line
3 Insert the side of the fine coxial cable with the protection cover through the hole, and pull out to the position where the white line is visible.
protection cover

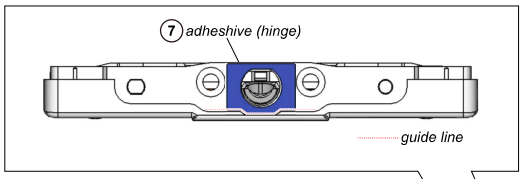
7 adheshive (hinge)
guide line

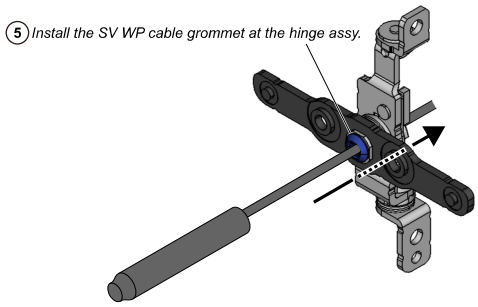
5 Install the SV WP cable grommet at the hinge assy.

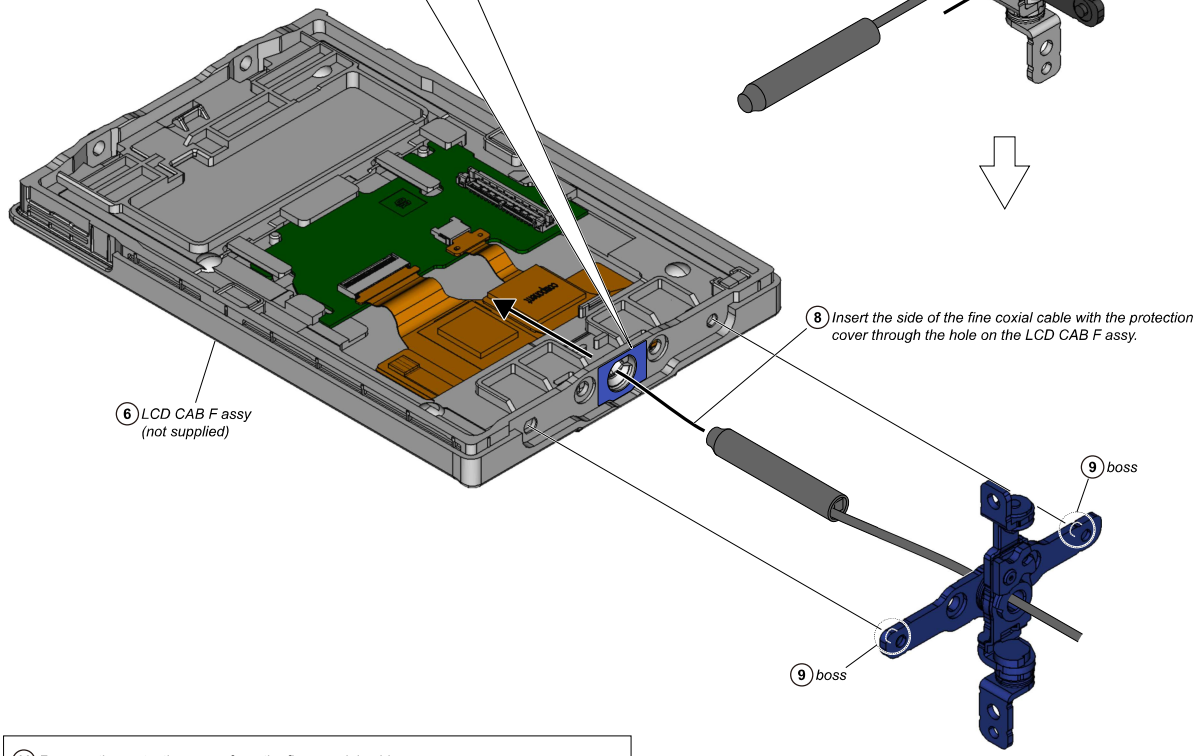
6 LCD CAB F assy
(not supplied)
8 Insert the side of the fine coxial cable with the protection cover through the hole on the LCD CAB F assy.
9 boss
9 boss

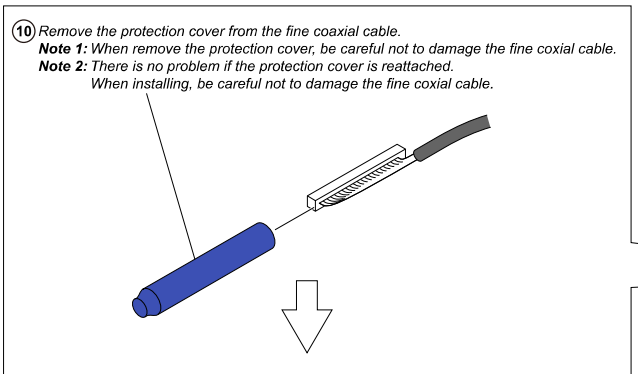
10 Remove the protection cover from the fine coaxial cable.
Note 1: When remove the protection cover, be careful not to damage the fine coxial cable.
Note 2: There is no problem if the protection cover is reattached.
When installing, be careful not to damage the fine coxial cable.

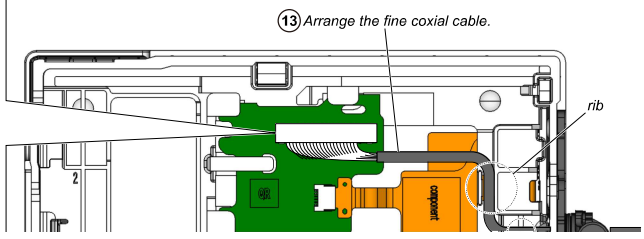
13 Arrange the fine coxial cable.
rib

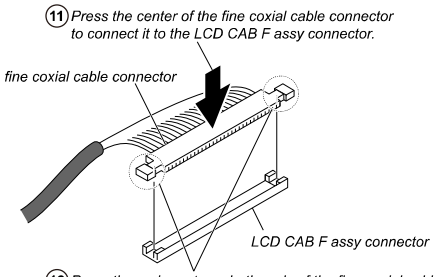

(11) Press the center of the fine coxial cable connector to connect it to the LCD CAB F assy connector.

(12) Press the resin parts on both ends of the fine coxial cable connector to attach it to the LCD CAB F assy connector.

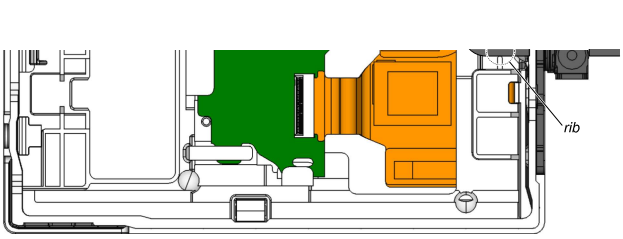

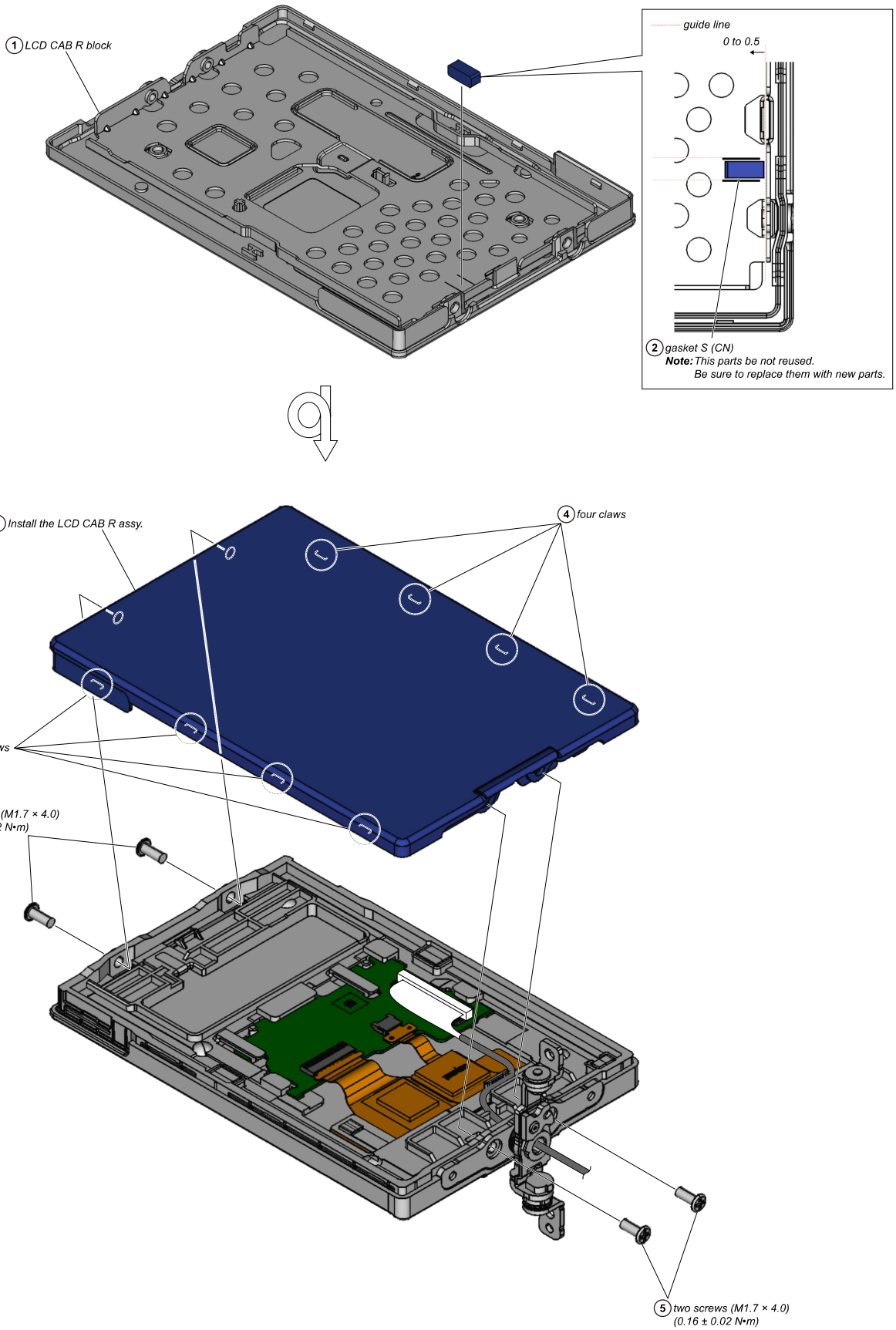
1 LCD CAB R block
guide line
0 to 0.5
2 gasket S (CN)
Note: This parts be not reused.
Be sure to replace them with new parts.
3 Install the LCD CAB R assy.
4 four claws
4 four claws
6 two screws (M1.7 × 4.0)
(0.16 ± 0.02 N•m)
5 two screws (M1.7 × 4.0)
(0.16 ± 0.02 N•m)

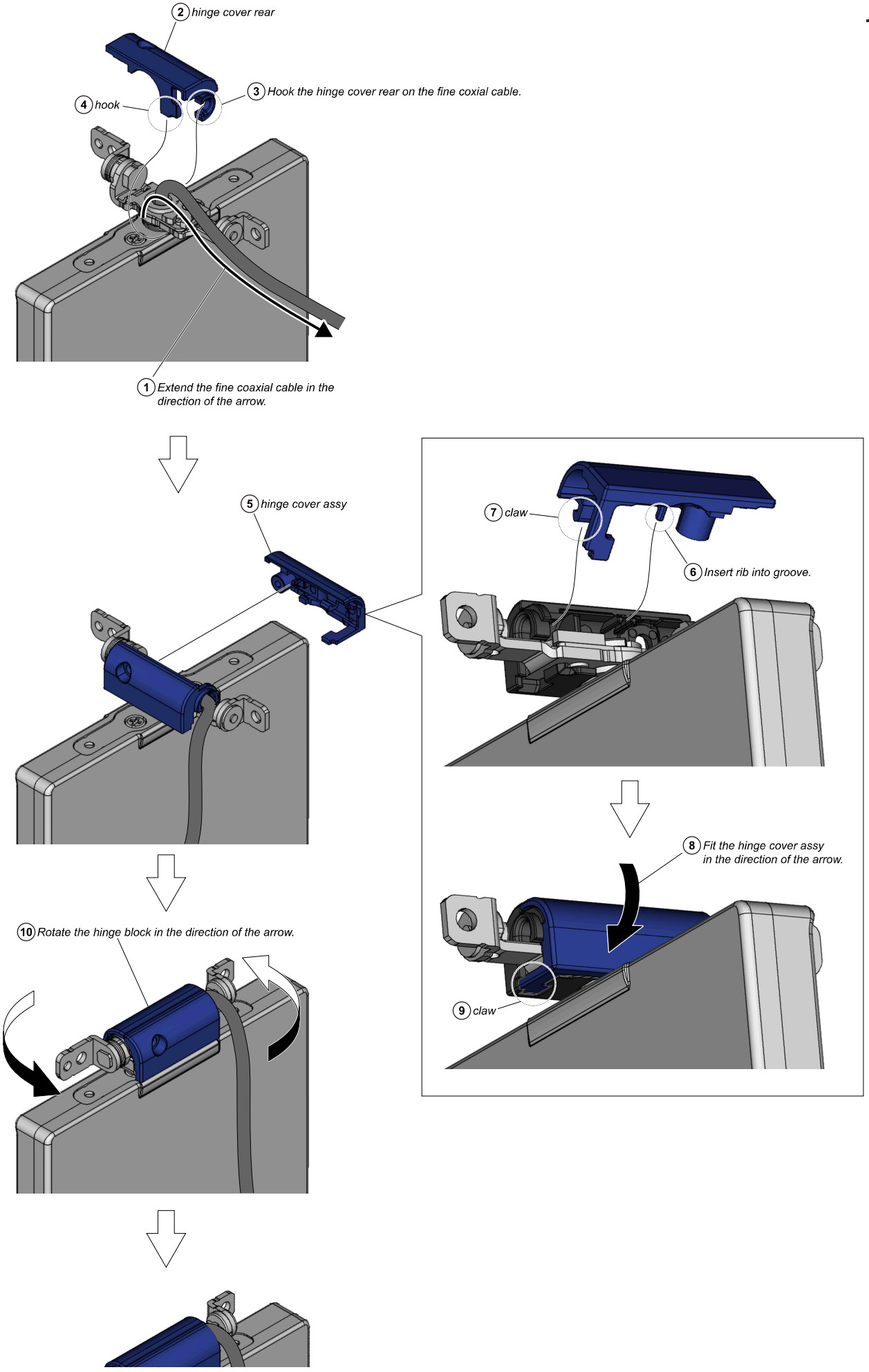
2 hinge cover rear
3 Hook the hinge cover rear on the fine coxial cable.
4 hook
1 Extend the fine coaxial cable in the direction of the arrow.
5 hinge cover assy
7 claw
6 Insert rib into groove.
8 Fit the hinge cover assy in the direction of the arrow.
9 claw
10 Rotate the hinge block in the direction of the arrow.

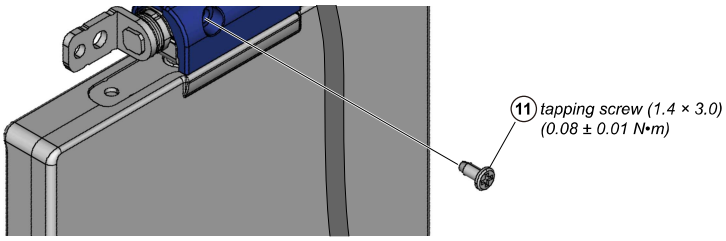
11 tapping screw (1.4 × 3.0)
(0.08 ± 0.01 N•m)

54. LCD CABINET BLOCK

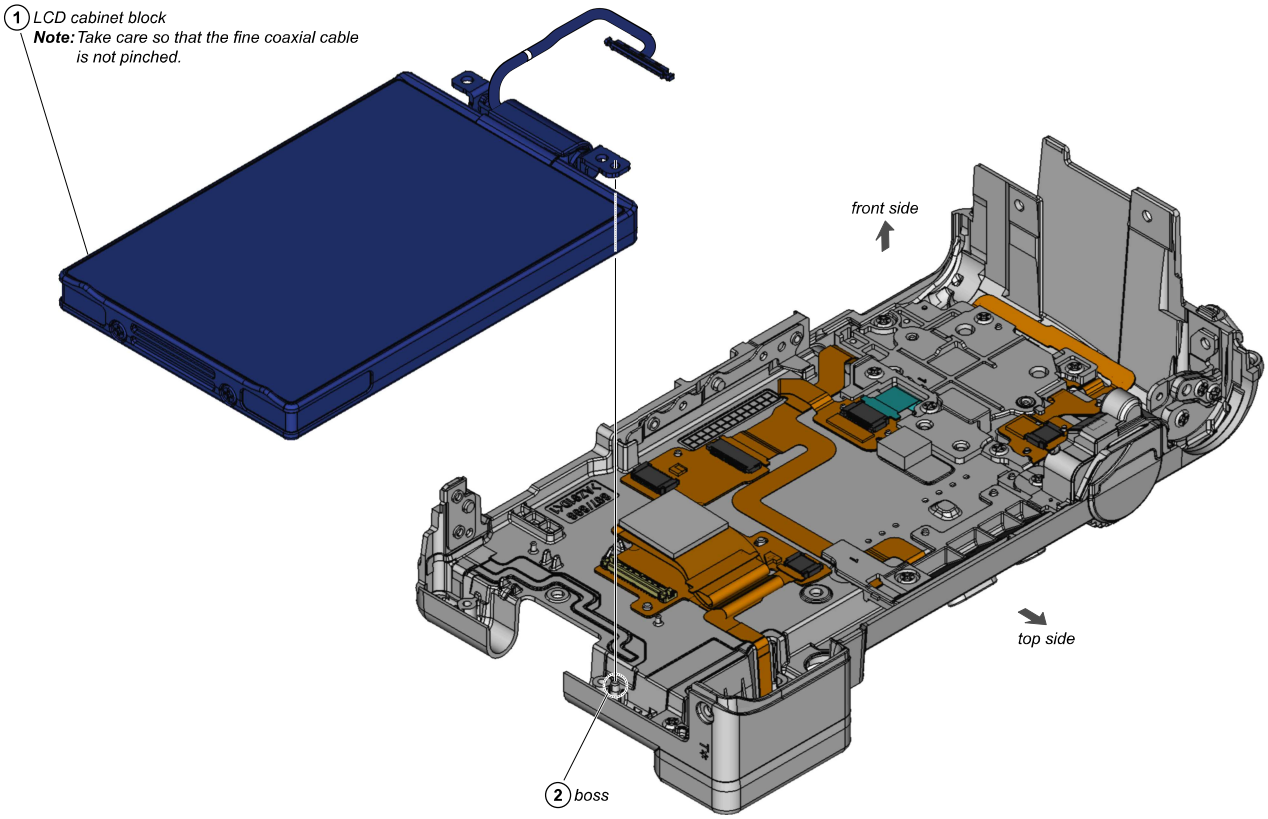

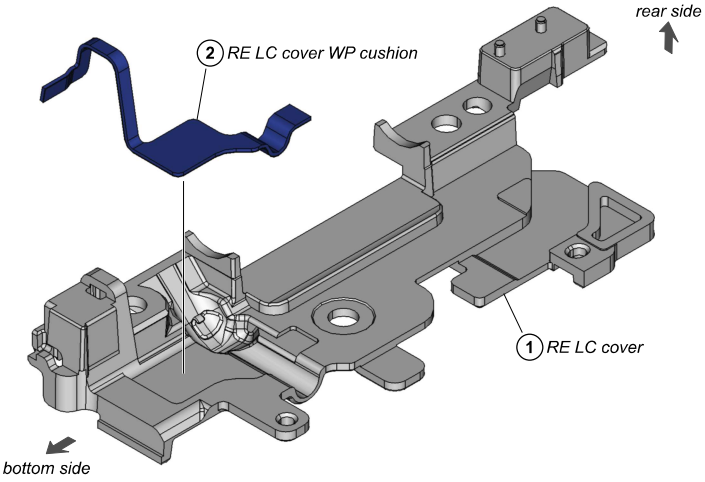
rear side
2 RE LC cover WP cushion
1 RE LC cover
bottom side

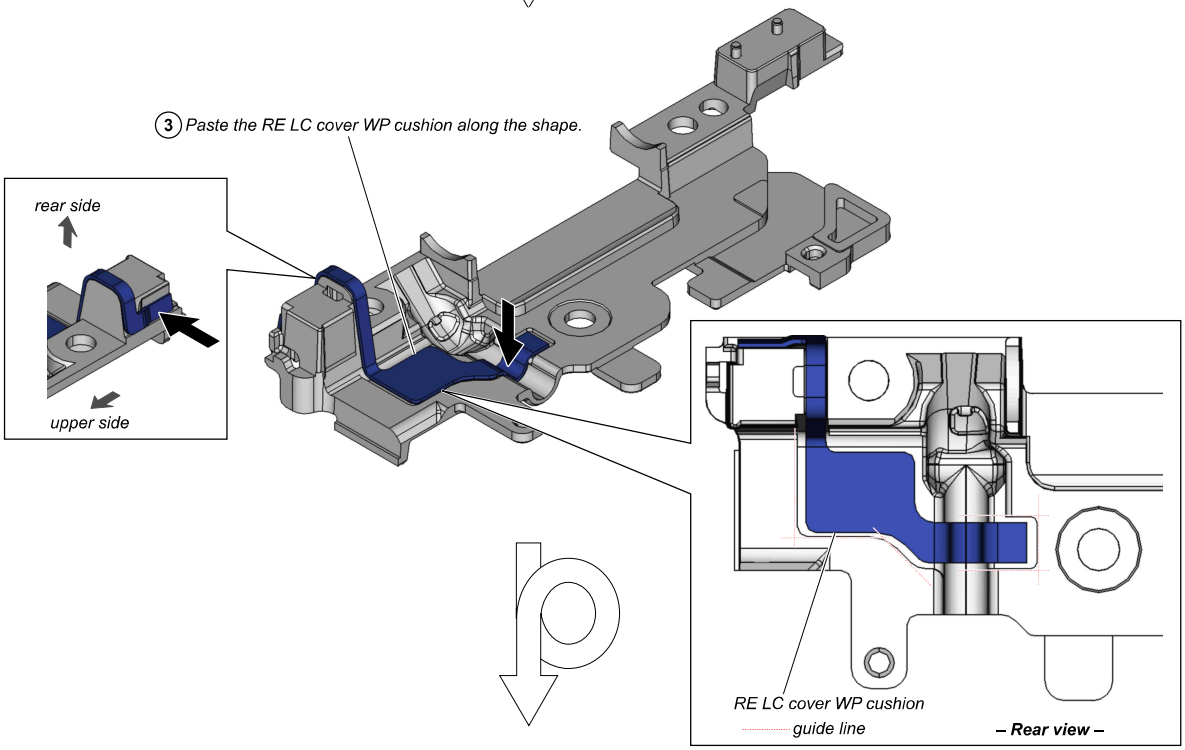
3 Paste the RE LC cover WP cushion along the shape.
rear side
upper side
RE LC cover WP cushion
guide line
– Rear view –

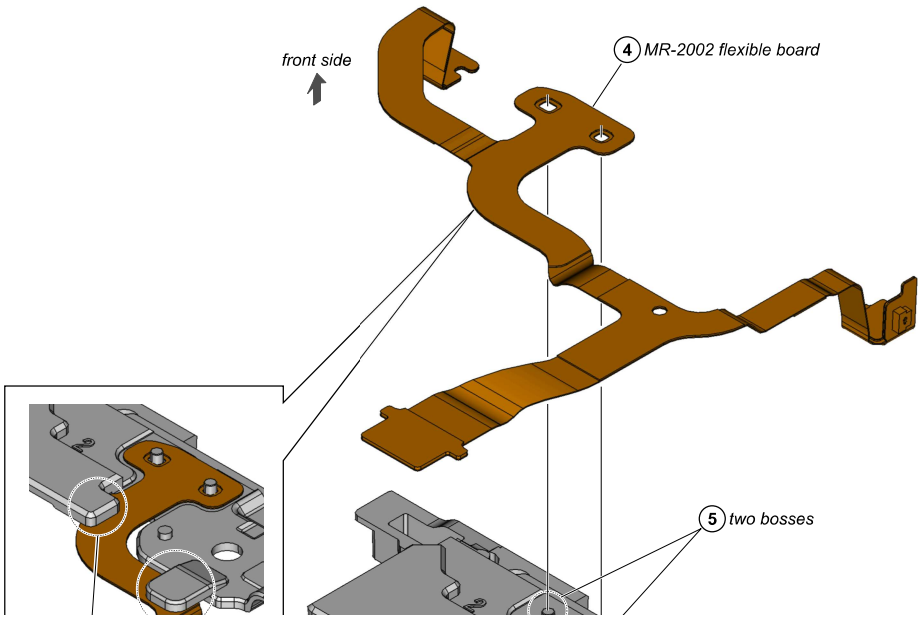
front side
4 MR-2002 flexible board
5 two bosses

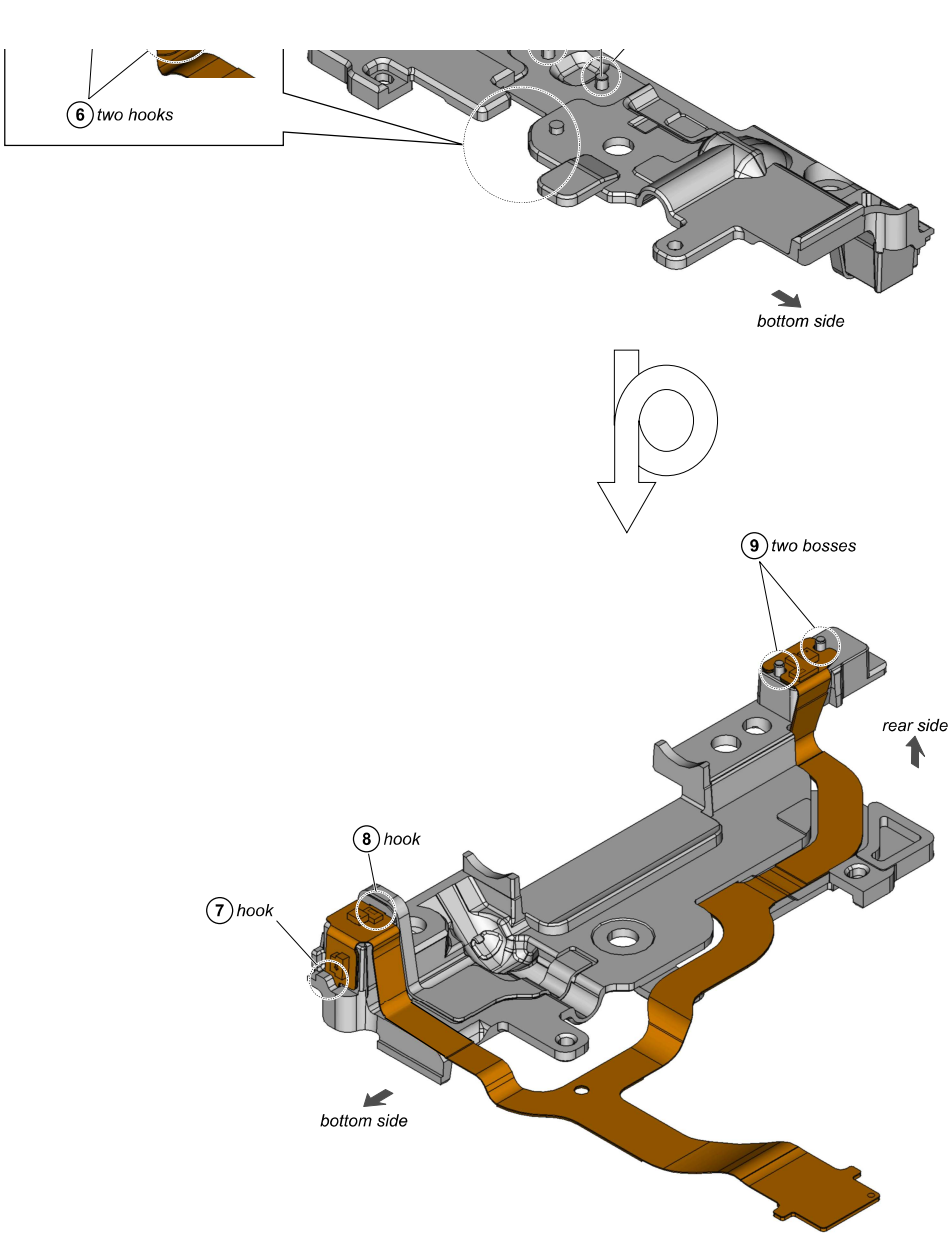
6 two hooks
bottom side
9 two bosses
rear side
8 hook
7 hook
bottom side

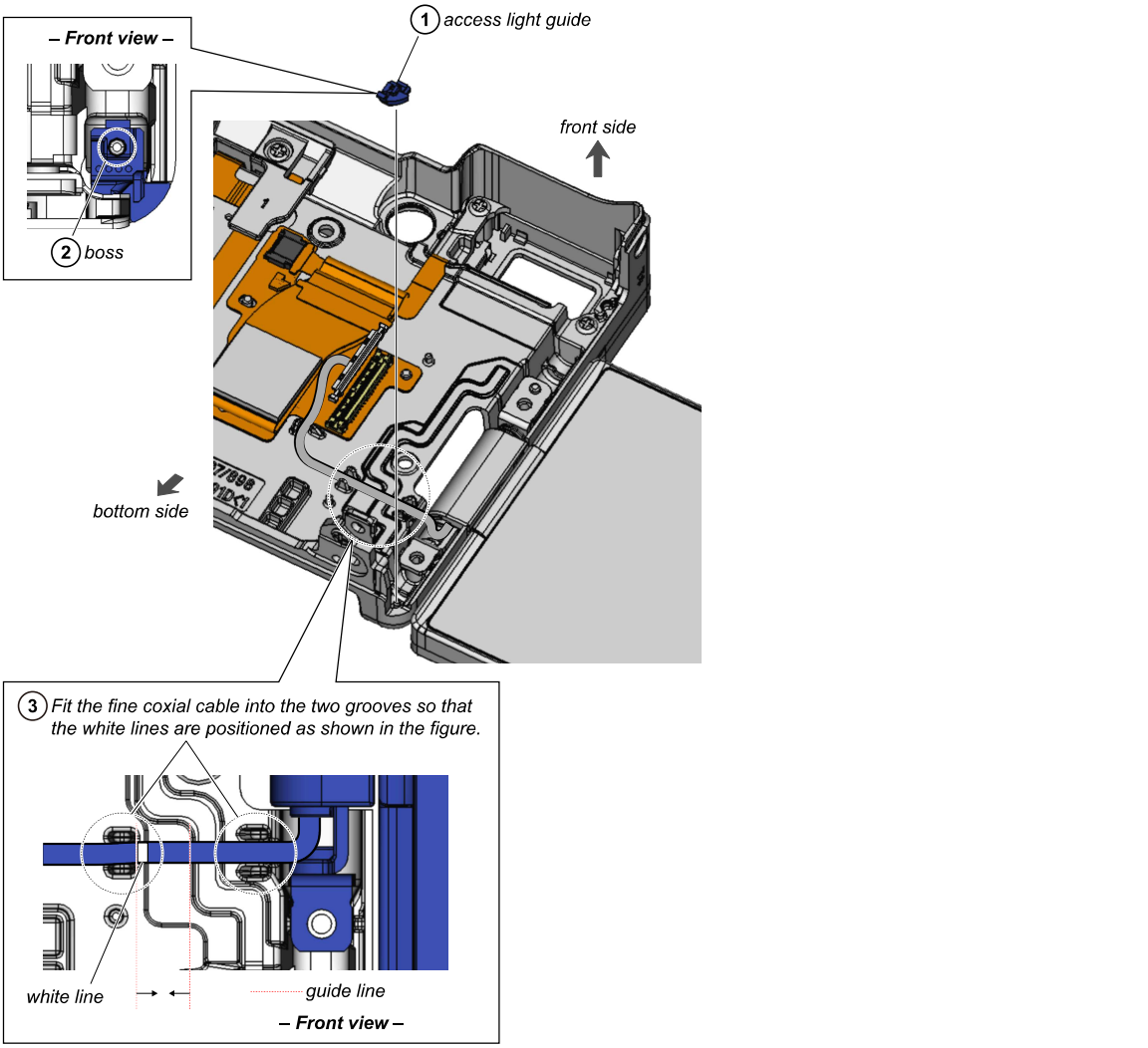
– Front view –
1 access light guide
2 boss
front side
bottom side
3 Fit the fine coxial cable into the two grooves so that the white lines are positioned as shown in the figure.
white line
guide line
– Front view –
6 two screws (M1.7 × 5.0)
(0.2 ± 0.02 N•m)
4 RE LC cover block
Note: Take care not to damage the mounted parts.
front side
5 two bosses

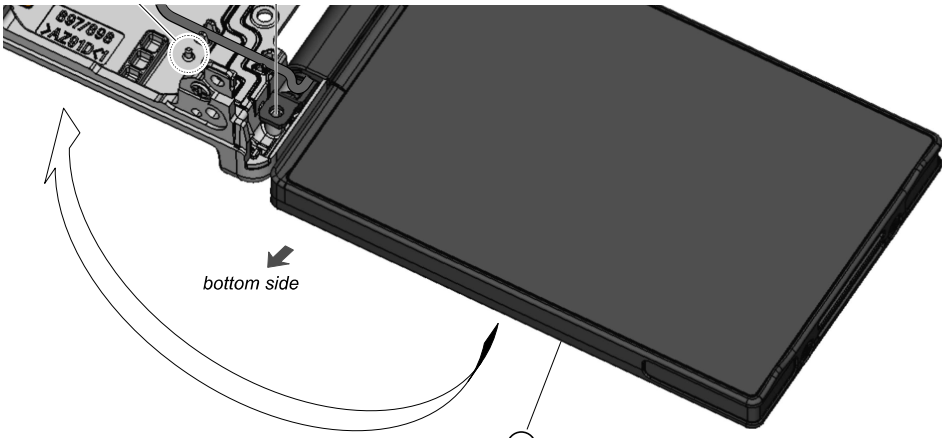

7 Fold the LCD cabinet block.

– Front view –

9 Press the center of the fine coxial cable connector to connect it to the RS-1028 flexible board connector.

fine coxial cable connector

RS-1028 flexible board connector

10 Press the resin parts on both ends of the fine coxial cable connector to attach it to the RS-1028 flexible board connector.

8 Connect the MR-2002 flexible board.

11 Fit the fine coxial cable into the groove.

– Front view –

guide line

12 cushion BT BB

front side

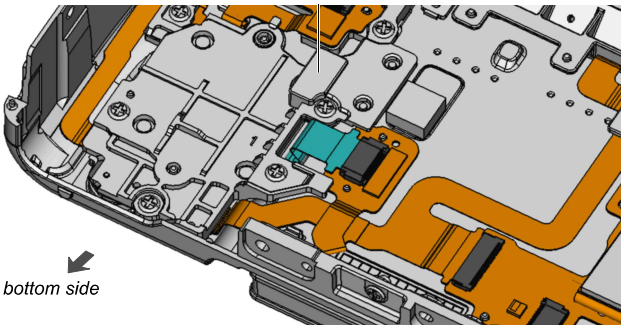
bottom side

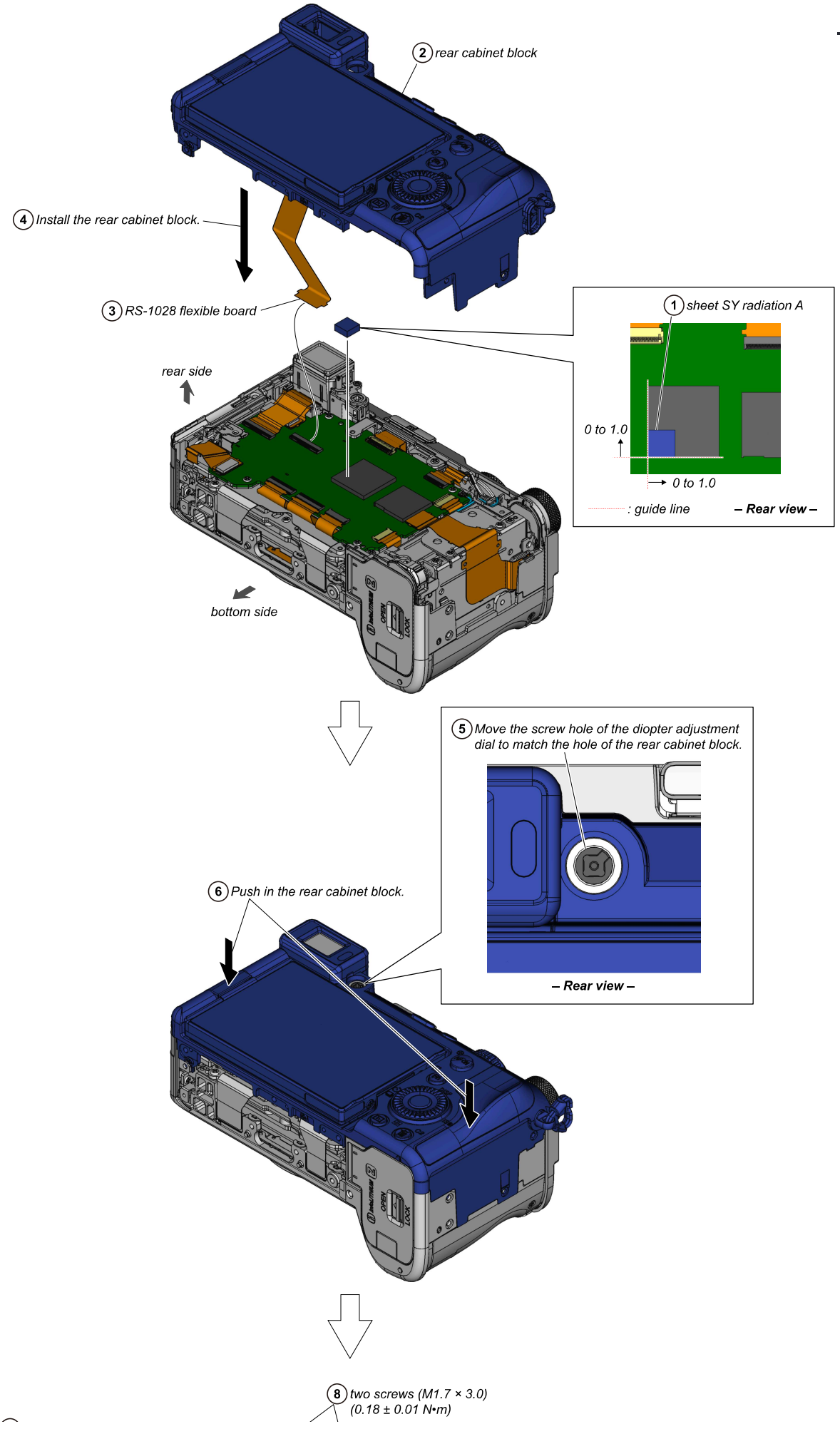
2 rear cabinet block
4 Install the rear cabinet block.
3 RS-1028 flexible board
rear side
bottom side
1 sheet SY radiation A
0 to 1.0
0 to 1.0
: guide line
– Rear view –
5 Move the screw hole of the diopter adjustment dial to match the hole of the rear cabinet block.
– Rear view –
6 Push in the rear cabinet block.
8 two screws (M1.7 × 3.0)
(0.18 ± 0.01 N•m)

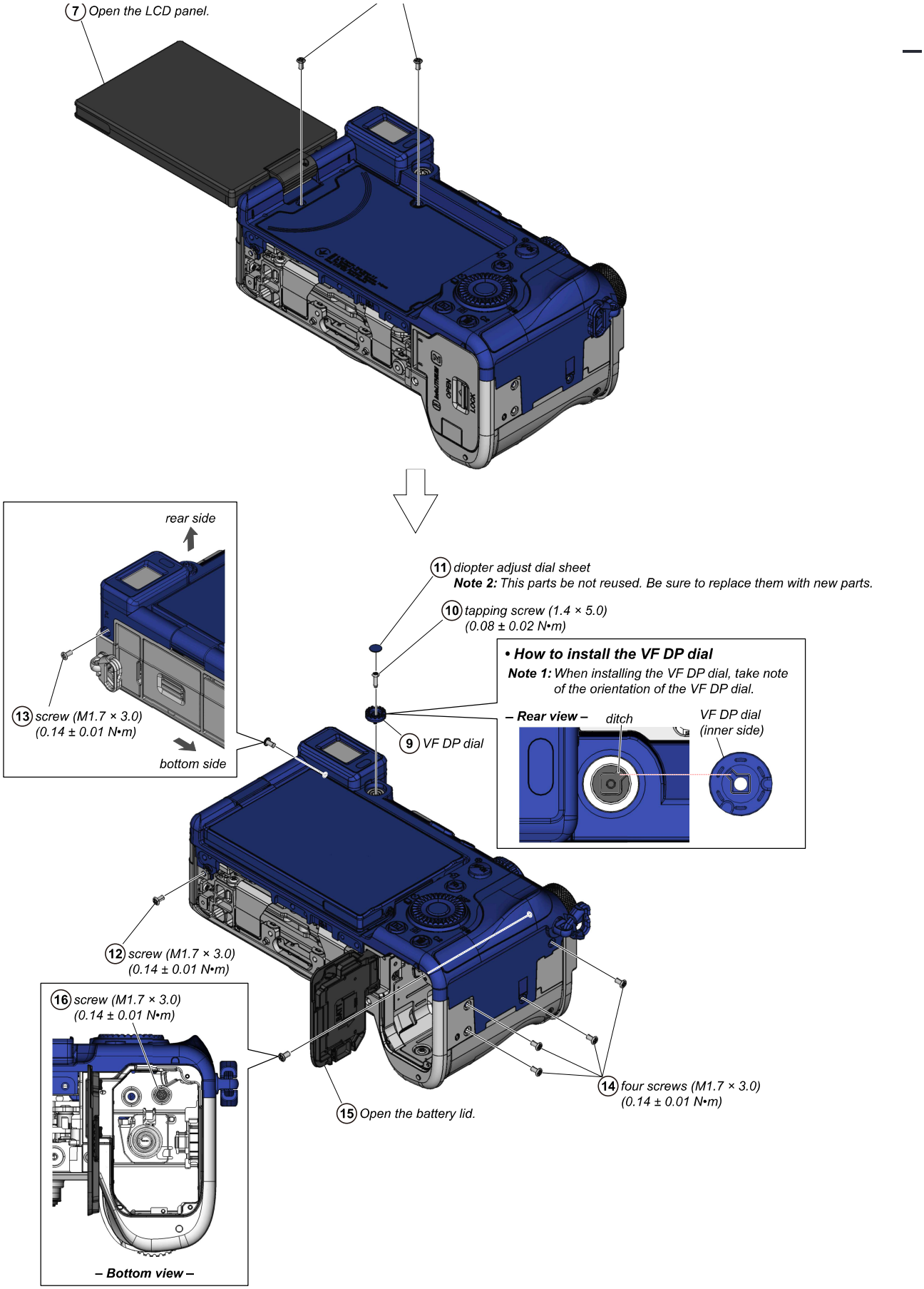
7 Open the LCD panel.
rear side
bottom side
13 screw (M1.7 × 3.0)
(0.14 ± 0.01 N•m)
11 diopter adjust dial sheet
Note 2: This parts be not reused. Be sure to replace them with new parts.
10 tapping screw (1.4 × 5.0)
(0.08 ± 0.02 N•m)
• How to install the VF DP dial
Note 1: When installing the VF DP dial, take note of the orientation of the VF DP dial.
– Rear view –
ditch
VF DP dial
(inner side)
9 VF DP dial
12 screw (M1.7 × 3.0)
(0.14 ± 0.01 N•m)
16 screw (M1.7 × 3.0)
(0.14 ± 0.01 N•m)
– Bottom view –
15 Open the battery lid.
14 four screws (M1.7 × 3.0)
(0.14 ± 0.01 N•m)

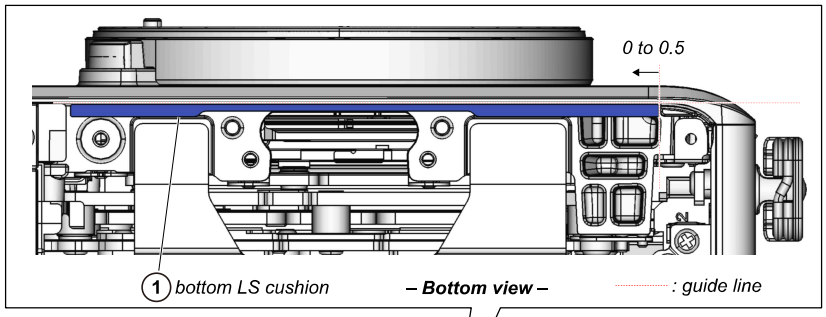

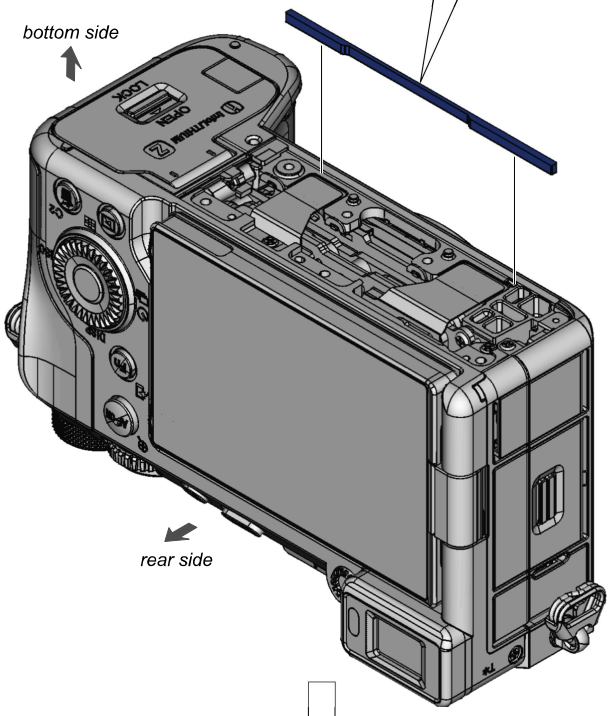

2 Install the bottom frame assy while pressing it against the bottom LS cushion.

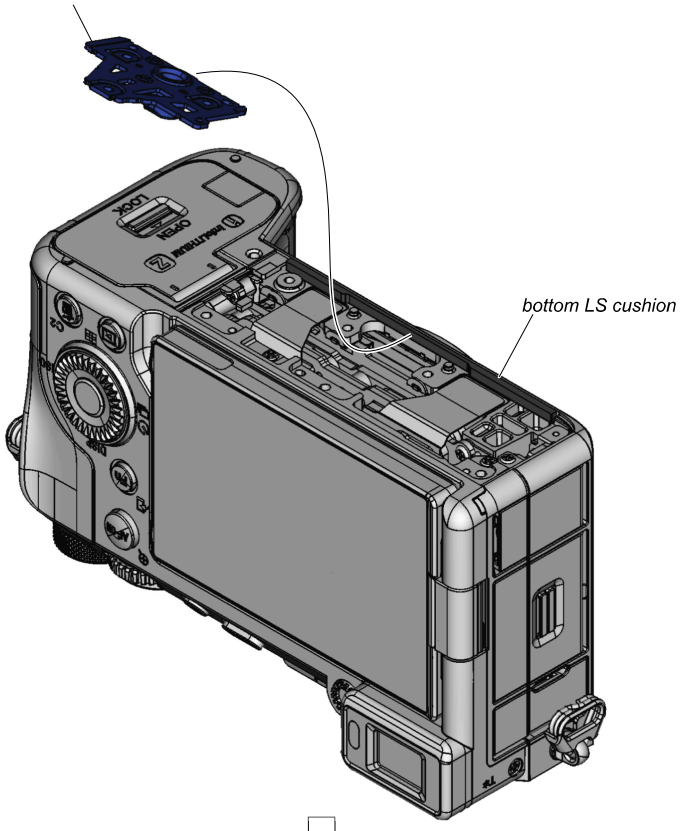

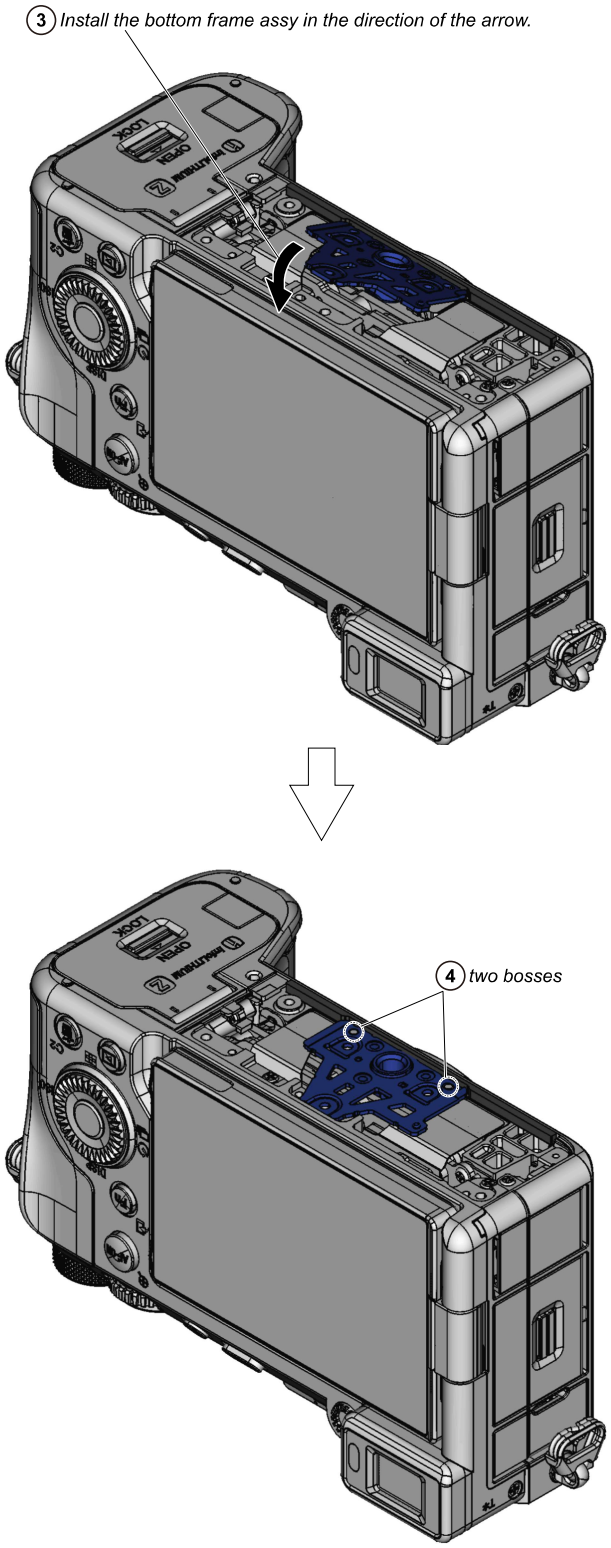
3 Install the bottom frame assy in the direction of the arrow.
4 two bosses

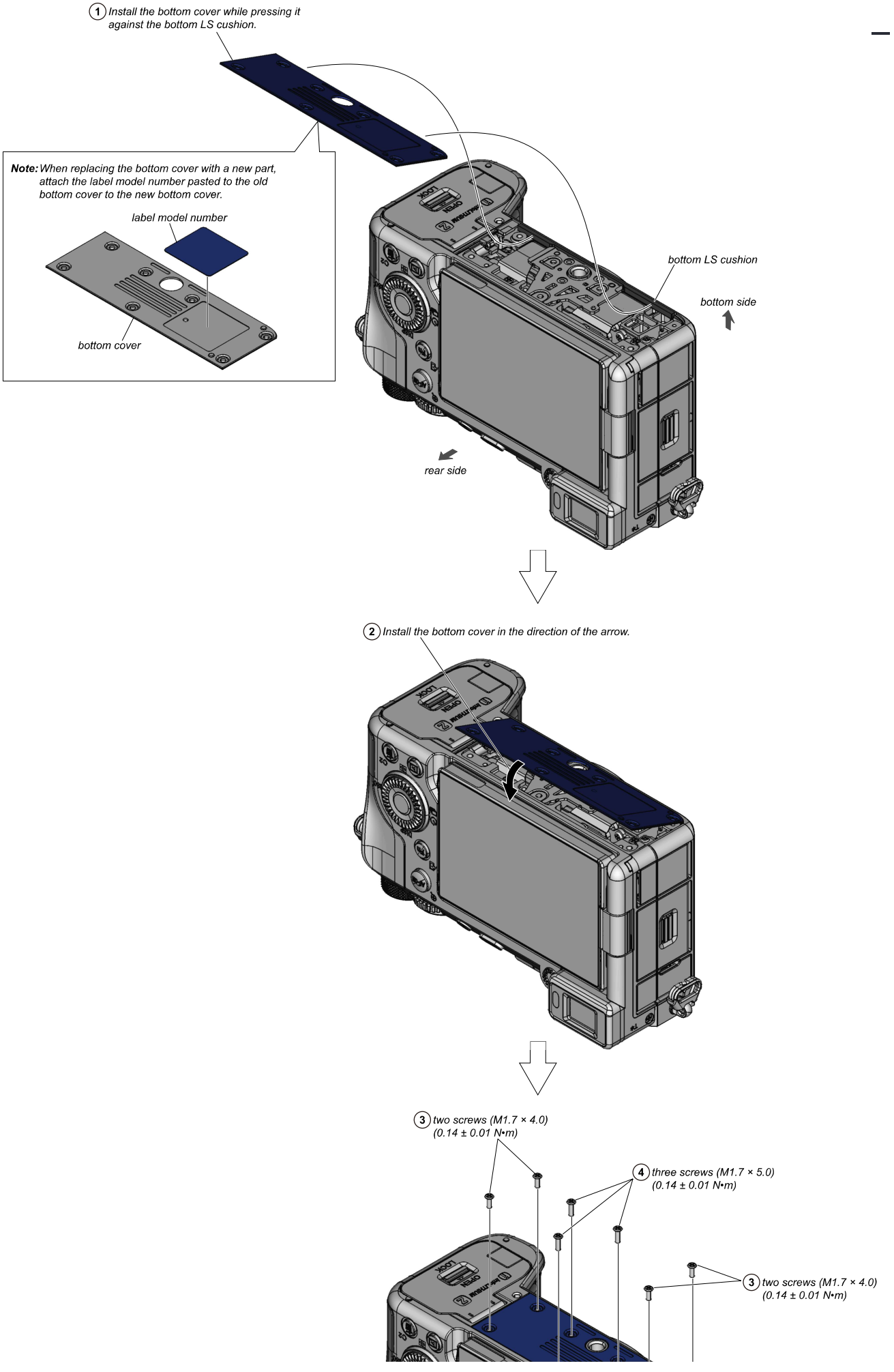
1 Install the bottom cover while pressing it against the bottom LS cushion.
Note: When replacing the bottom cover with a new part, attach the label model number pasted to the old bottom cover to the new bottom cover.
label model number
bottom cover
bottom LS cushion
bottom side
rear side
2 Install the bottom cover in the direction of the arrow.
3 two screws (M1.7 × 4.0) (0.14 ± 0.01 N•m)
4 three screws (M1.7 × 5.0) (0.14 ± 0.01 N•m)
3 two screws (M1.7 × 4.0) (0.14 ± 0.01 N•m)

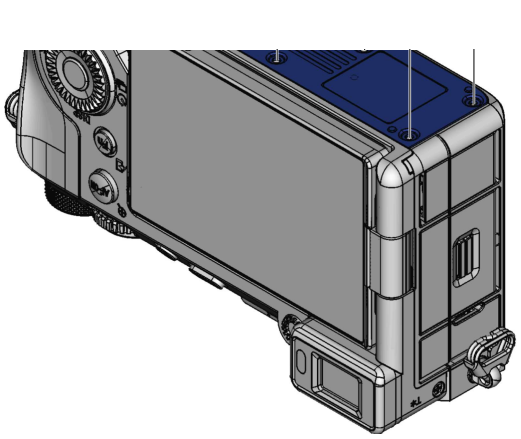

60. FRONT GRIP RUBBER

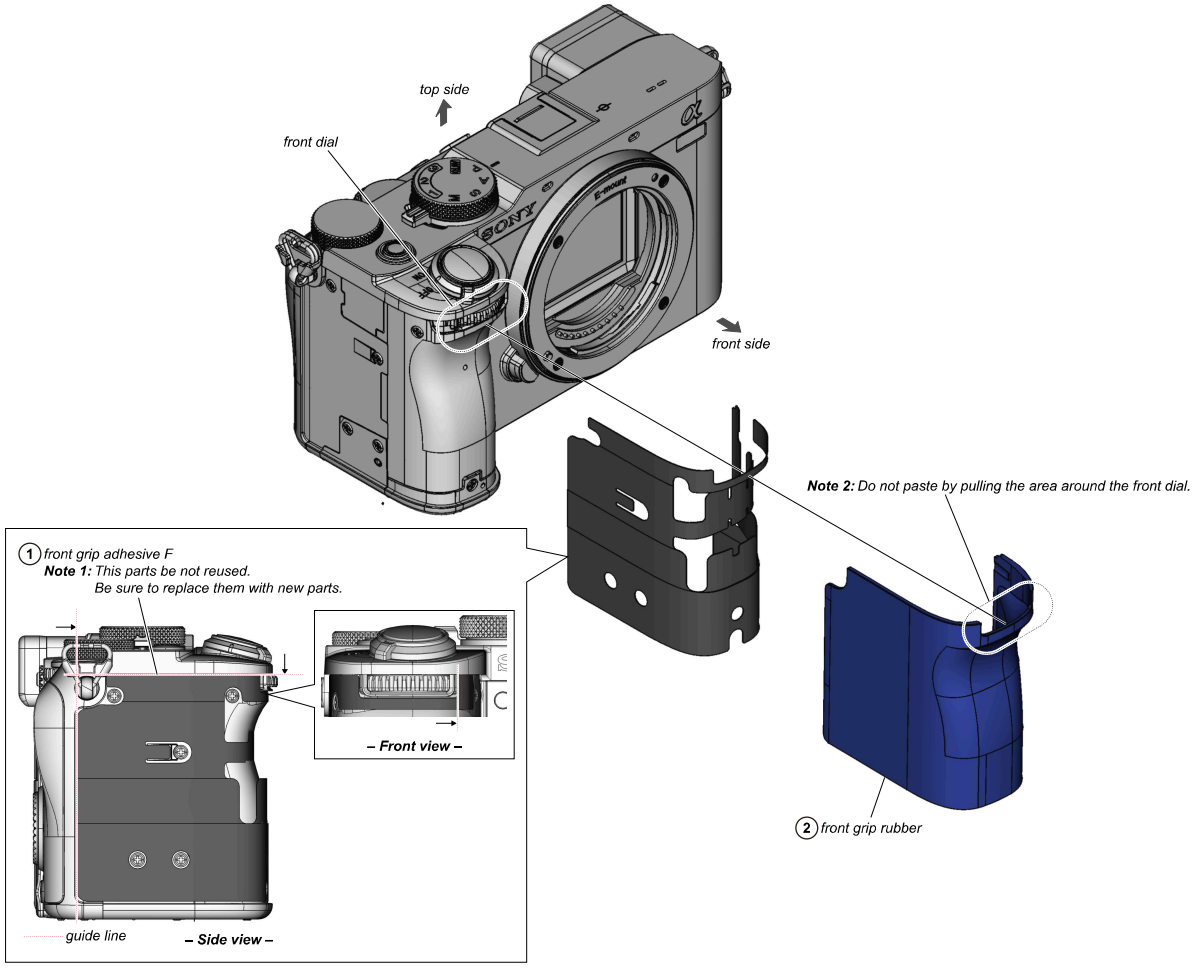

 © 2024.04

EXPLODED VIEWS

Note

- Items marked "*" are not stocked since they are seldom required for routine service. Some delay should be anticipated when ordering these items.
- The mechanical parts with no reference number in the exploded views are not supplied.

The components identified by mark ⚠ or dotted line with mark are critical for safety.
Replace only with part number specified.

OVERALL SECTION

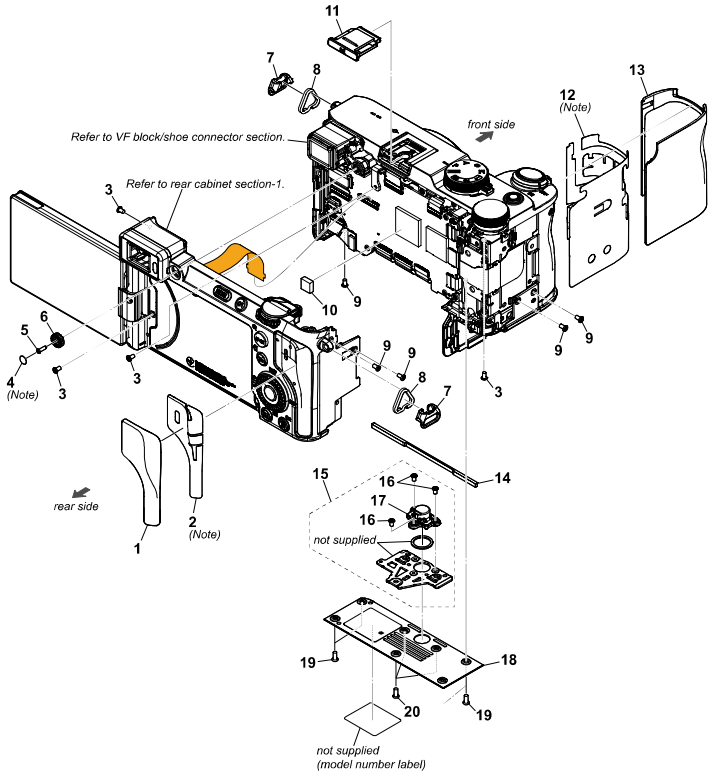

Ref. No.	Part No.	Description
1	505257201	REAR GRIP RUBBER (897)
2	505270301	REAR GRIP ADHESIVE (897) (Note)
3	444694921	SCREW (M1.7) (L = 3.0 mm)
4	453172122	DIOPTER ADJUST DIAL SHEET (775) (Note)
5	430010611	BTITE (1.4 (CH)) (L = 5.0 mm)
6	501780001	VF DP DIAL (88600)
7	448787501	HOLDER, EYELET TRIANGLE (779)
8	501695901	EYELET TRIANGLE (850)
9	259947521	SCREW (M1.7) (L = 3.0 mm)
10	505269501	SHEET SY RADIATION A (897)
11	443873403	SHOE CAP (875) (BLACK)
11	443873431	SHOE CAP (875) (SILVER)
12	505270201	FRONT GRIP ADHESIVE F (897) (Note)
13	505257101	FRONT GRIP RUBBER (897)
14	505269901	BOTTOM LS CUSHION (897)
15	X50038091	BOTTOM FRAME ASSY (897)
16	444694931	SCREW (M1.7) (L = 2.5 mm)
17	501777412	TRIPOD SCREW (88600)
18	505270001	BOTTOM COVER (897)
19	444694901	SCREW (M1.7) (L = 4.0 mm)
20	444694941	SCREW (M1.7) (L = 5.0 mm)

Note

This parts be not reused. Be sure to replace them with new parts.

REAR CABINET SECTION-1

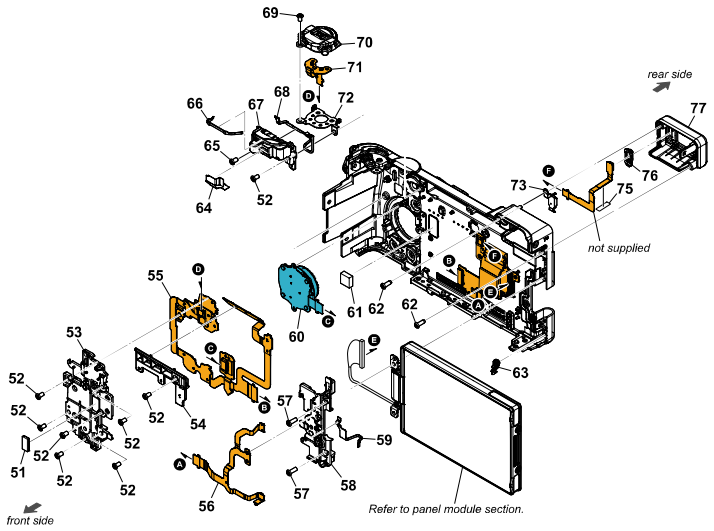

Ref. No.	Part No.	Description
51	504672001	CUSHION BT BB (89500)
52	259947521	SCREW (M1.7) (L = 3.0 mm)
53	505278301	REAR BUTTON HOLDER (897)
54	505277801	MEMU C BUTTON HOLDER (897)
55	A5063987A	KY-1040 FLEXIBLE BOARD, COMPLETE
56	A5059432A	MR-2002 FLEXIBLE BOARD, COMPLETE
57	428743621	SCREW (M1.7) (L = 5.0 mm)
58	505278701	RE LC COVER (897)
59	505278801	RE LC COVER WP CUSHION (897)
60	100189121	SWITCH BLOCK, CONTROL (BK88100)
61	505269501	SHEET SY RADIATION A (897)
62	430011521	TAPPING (1.7) (CH) (L = 5.0 mm)
63	505278901	ACCESS LIGHT GUIDE (897)
64	505295601	RE DIAL WP SHEET (897)
65	263556271	SCREW (M1.7) (L = 4.0 mm)
66	505277401	RE DIAL WP CUSHION T (897)
67	505277301	RE DIAL WP COVER (897)
68	505277501	RE DIAL WP CUSHION R (897)
69	444694931	SCREW (M1.7) (L = 2.5 mm)
70	X50014893	RE CNT DIAL ASSY (88600)
71	A5063988A	RE-1011 FLEXIBLE BOARD, COMPLETE
72	505277201	RE DIAL ES PLATE (897)
73	X50038071	ES PLATE ASSY (897)
75	505279301	ES ADHESIVE (897)
76	505279201	ES WINDOW (897)
77	505279101	VF COVER (897)

REAR CABINET SECTION-2

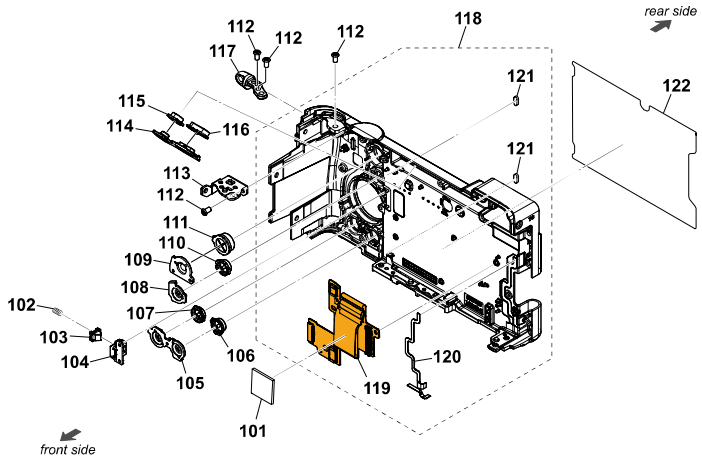

Ref. No.	Part No.	Description
101	505279601	CUSHION RS FPC (897)
102	501033101	LC LOCK SPRING (850)
103	504640901	CLAW LC LOCK (89400) BK
104	504641001	COVER LC LOCK (89400) BK
105	505278101	PLAY DEL BUTTON RUBBER (897)
106	505277901	PLAYBACK BUTTON (897)
107	505278001	DELETE BUTTON (897)
108	504650701	RE BUTTON RUBBER (89500)
109	505278201	AF RUBBER (897)
110	504650401	FN BUTTON (89500)
111	501776201	AO BUTTON (88600)
112	259947521	SCREW (M1.7) (L = 3.0 mm)
113	505278401	EYELET PLATE R (897)
114	505277701	MEMU C BUTTON RUBBER (897)
115	505277601	C1 BUTTON (897)
116	501810201	MENU BUTTON (88600)
117	A5066990A	EYELET (897) (SERVICE)
118	A5066989A	REAR CABI ASSY (897) (SERVICE)
119	A5059434A	RS-1028 FLEXIBLE BOARD, COMPLETE
120	505278601	RE LC WP CUSHION (897)
121	501141601	LC CUSHION (850)
122	505278501	REAR FRAME SHEET (897)

PANEL MODULE SECTION

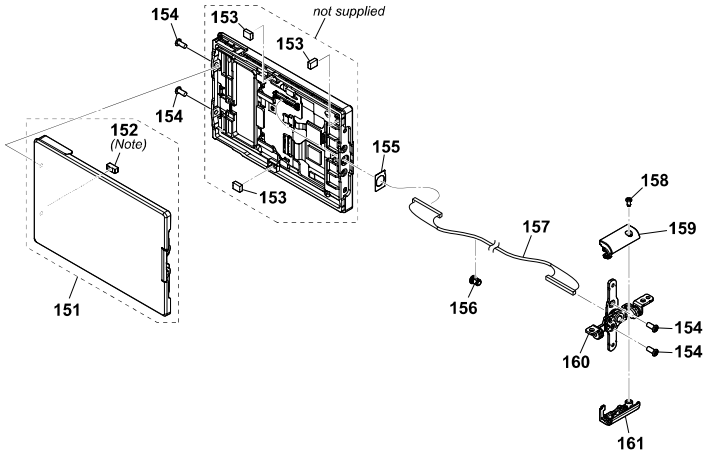

Ref. No.	Part No.	Description
151	A5061193A	SERVICE LCD CAB R ASSY (894) BK
152	503623601	GASKET S (CN (799)) (Note)
153	147173811	MAGNET, SENSOR
154	444694911	SCREW (M1.7) (L = 4.0 mm)
155	501161301	SV ADHESHIVE (HINGE)
156	501161101	SV WP CABLE GROMMET
157	100597632	FINE COXIAL CABLE
158	443388221	TAPPING (1.4) (ECOLOGY) (L = 3.0 mm)
159	501160401	SV HINGE COVER REAR
160	X50025011	SV HINGE ASSY
161	A5043354A	SERVICE HINGE COVER ASSY (891)

Note

This parts be not reused. Be sure to replace them with new parts.

VF BLOCK/SHOE CONNECTOR SECTION

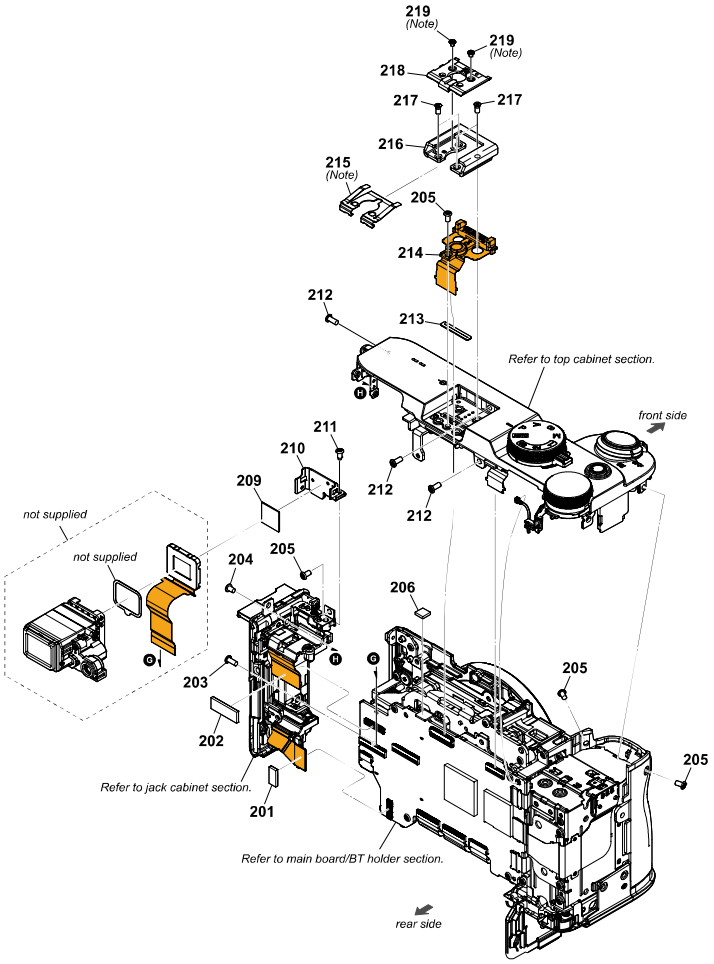

Ref. No.	Part No.	Description
201	504672001	CUSHION BT BB (89500)
202	505269701	CUSHION US BB (897)
203	444694901	SCREW (M1.7) (L = 4.0 mm)
204	444694931	SCREW (M1.7) (L = 2.5 mm)
205	259947521	SCREW (M1.7) (L = 3.0 mm)
206	505269601	SHEET TOP RADIATION (897)
209	505274001	TIM VF (897)
210	X50034231	VF FIX PLATE ASSY (89700)
211	430011501	TAPPING (1.7) (CH) (L = 3.5 mm)
212	444694901	SCREW (M1.7) (L = 4.0 mm) (BLACK)
212	259947531	SCREW (M1.7) (L = 4.0 mm) (SILVER)
213	501904101	SHOE FPC WP CUSHION (88600)
214	A5001908A	MIS-2006 FLEXIBLE BOARD, COMPLETE
215	500294502	MI SHOE SPRING PLATE (88100) (BLACK) (Note)
215	500294512	MI SHOE SPRING PLATE (88100) (SILVER) (Note)
216	500294302	MI SHOE SHELL PLATE (88100) (BLACK)
216	500294311	MI SHOE SHELL PLATE (88100) (SILVER)
217	500294711	SCREW (M1.7) SPECIAL HEAD (L = 3.5 mm)
218	500294602	MI SHOE SCREW COVER (88100)
219	428743511	SCREW (M1.4 EUROPE) TYPE (L = 1.4 mm) (Note)

Note

This parts be not reused. Be sure to replace them with new parts.

TOP CABINET SECTION

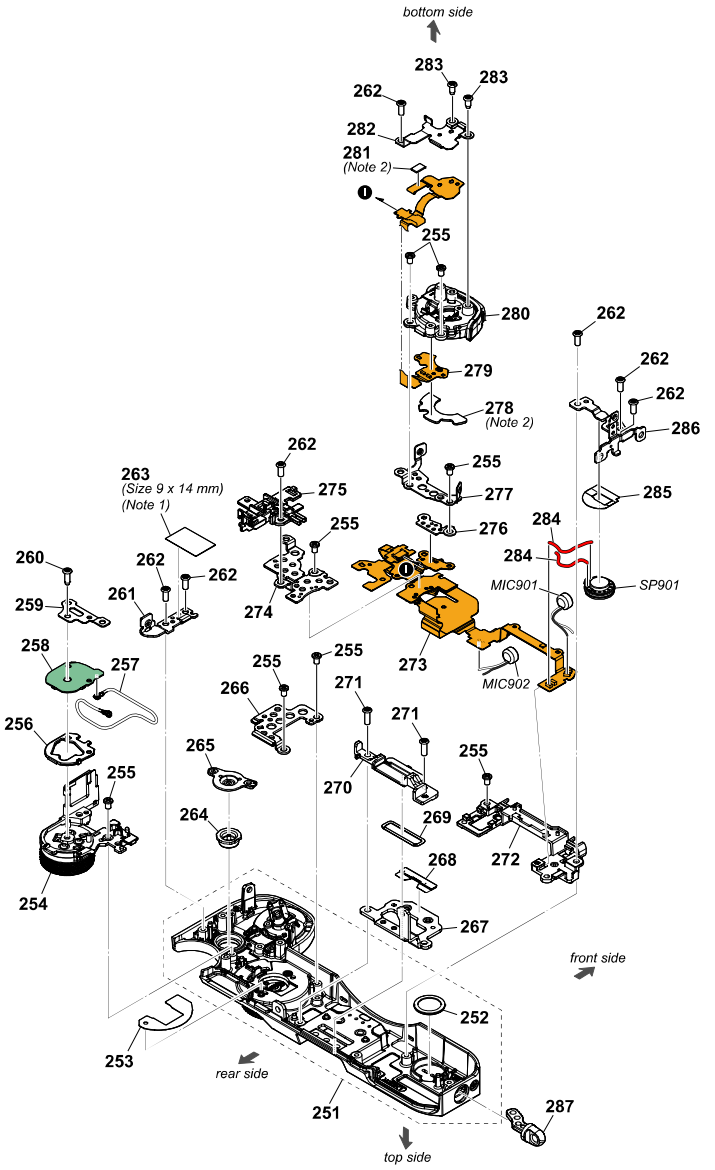

Note 1

When replacing this parts, cut the new parts to the specific size indicated in the figure before use.

Note 2

This parts be not reused. Be sure to replace them with new parts.

Ref. No.	Part No.	Description
251	A5066987A	TOP CAB ASSY (LOGO) (898) (BK) (S) (BLACK)
251	A5066988A	TOP CAB ASSY (LOGO) (898) (SV) (S) (SILVER)
252	472957801	SPEAKER BLIND SHEET (62000)
253	505295401	MD PROTECTION SHEET (897)
254	X50038051	CNT DIAL ASSY (897) (BK) (BLACK)
254	X50038061	CNT DIAL ASSY (897) (SV) (SILVER)
255	263556211	SCREW (M1.7) (L = 2.5 mm)
256	504637801	SPACER CONT DIAL
257	184647421	CABLE, COAXIAL (85 mm)
258	A5063985A	AN-1046 BOARD, COMPLETE
259	505275001	CNT DIAL GND PLATE (897)
260	430011521	TAPPING (1.7) (CH) (L = 5.0 mm)
261	505275301	TOP CONNECT PLATE G (897)
262	259947531	SCREW (M1.7) (L = 4.0 mm)
263	444601401	TAPE AS (2040) (Note 1)
264	501771202	REC BUTTON (88600) (BK) (BLACK)
264	501771212	REC BUTTON (88600) (SV) (SILVER)
265	501771301	REC BUTTON RUBBER (88600)
266	505274901	MD HOLDER PLATE (897)
267	505274401	SHOE BASE PLATE (897)
268	502001601	SHOE DG SHEET (88600)
269	501904001	SHOE FPC WP ADHESIVE (88600)
270	505274501	SHOE FP GUIDE (897)
271	259947541	SCREW (M1.7) (L = 5.0 mm)
272	505274301	MIC HOLDER (897)
273	A5063989A	TF-2003 FLEXIBLE BOARD, COMPLETE
274	505274101	REC HOLDER PLATE (897)
275	505275101	CABLE HOLDER (897)
276	505274201	PW SW PLATE (897)
277	505274801	RL BASE PLATE (897)
278	504803001	F DIAL PR CUSHION (89500) (Note 2)
279	A5059433A	RL-1075 FLEXIBLE BOARD, COMPLETE
280	X50034292	F DIAL ASSY (89500)
281	504957401	CUSHION RL GND (89500) (Note 2)
282	505275201	RL SW HOLDER PLATE (897)
283	430011501	TAPPING (1.7) (CH) (L = 3.5 mm)
284	184855011	CABLE
285	505295501	SP SHADING SHEET (897)
286	X50037991	TOP CONNECT PLATE L ASSY (897)
287	A5066990A	EYELET (897) (SERVICE)
MIC901	101537221	ELECTRET CONDENSER MICROPHONE (L)
MIC902	101537221	ELECTRET CONDENSER MICROPHONE (R)
SP901	185921012	LOUDSPEAKER (1.0 cm)

JACK CABINET SECTION

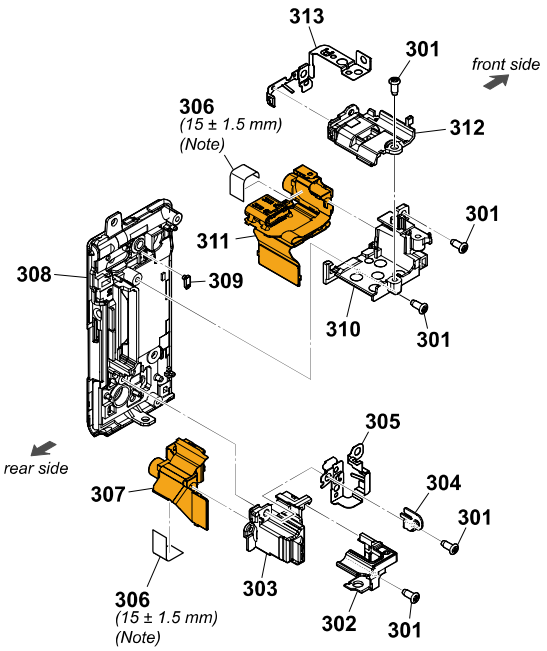

Ref. No.	Part No.	Description
301	430011311	TAPPING (1.7) (CH) (L = 4 mm)
302	505271801	JK HOLD HD (897)
303	505271901	JK HOLD HP (897)
304	505272201	JK FRAME RE (897)
305	505272101	JK HD PLATE (897)
306	750000493	TAPE (631S #25) 7 mmX50M BLK (Note)
307	A5057105A	HD-1011 FLEXIBLE BOARD, COMPLETE
308	X50037981	JK CABINET ASSY (897)
309	504633201	CHARGE LIGHT GUIDE (89400)
310	505272401	JK HOLD USB BASE (897)
311	A5063990A	US-1011 FLEXIBLE BOARD, COMPLETE
312	505272301	JK HOLD USB (897)
313	505272501	JK USB PLATE (897)

Note

When replacing this parts, cut the new parts to the specific size indicated in the figure before use.

MAIN BOARD/BT HOLDER SECTION

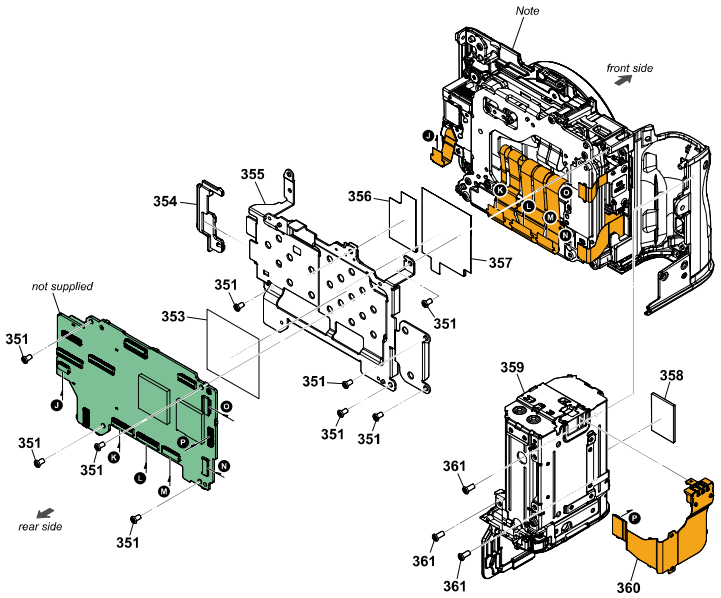

Ref. No.	Part No.	Description
351	259947521	SCREW (M1.7) (L = 3.0 mm)
353	505269301	SHEET SY PROTECT (897)
354	505269201	SY SUPPORT HOLDER (897)
355	X50037971	SY MAIN FRAME ASSY (897)
356	505330001	SHEET IM STABILIZER SLID2 (897)
357	505269401	SHEET IM STABILIZER SLID1 (897)
358	505271401	SHEET FRONT RADIATION (897)
359	X50034122	BT HOLDER ASSY BK
360	A5065343A	BT SOLDER (BT-2039 flexible board)
361	259947531	SCREW (M1.7) (L = 4.0 mm)

Note

It may get damaged from the influence of static electricity. Protect against static electricity and similarly take care when handling the MOS IC.

 © 2024.04

SUPPLIED ACCESSORIES

Note

Items marked “*” are not stocked since they are seldom required for routine service. Some delay should be anticipated when ordering these items.

The components identified by mark ⚠ or dotted line with mark are critical for safety.
Replace only with part number specified.

Click the part image to enlarge the image.

Ref. No.	Product	Part No.	Description
*		505492011	MANUAL, INSTRUCTION (Startup Guide) (ENGLISH)
*		505492021	MANUAL, INSTRUCTION (Startup Guide) (FRENCH)
⚠901	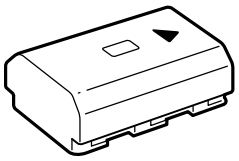	802663130	Rechargeable battery pack (NP-FZ100/UC)
902	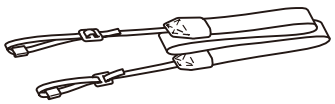	505513601	Shoulder strap
903	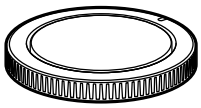	418853601	Body cap
904	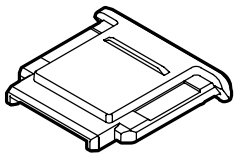	443873403	Shoe cap (BLACK)
		443873431	Shoe cap (SILVER)
905	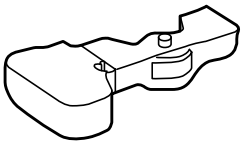	X50038851	Grip Extension

 © 2024.04

FRAME SCHEMATIC DIAGRAMS

FRAME SCHEMATIC DIAGRAMS

Zoom in

