DE'LONGHI "US/CA" EC885M

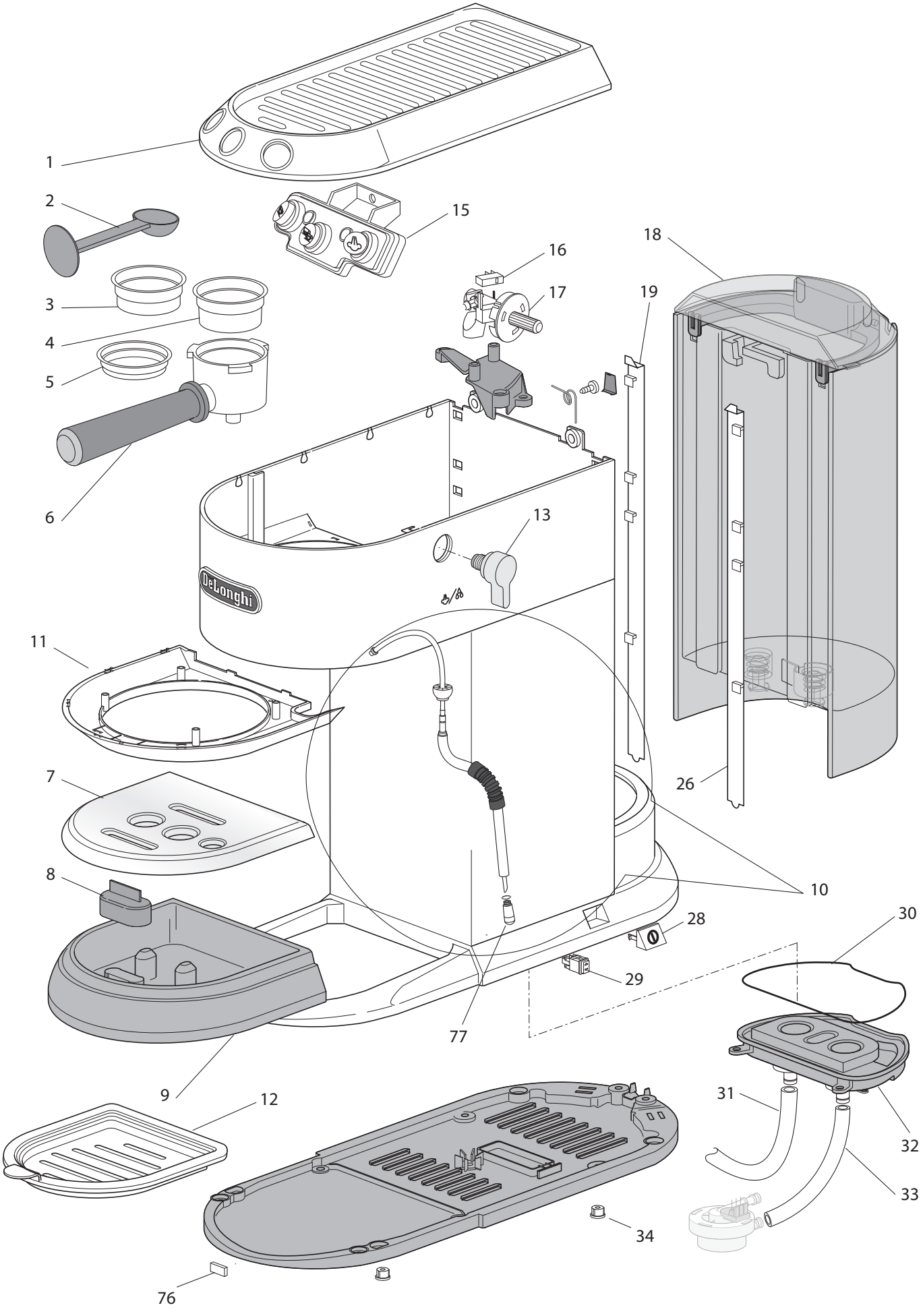

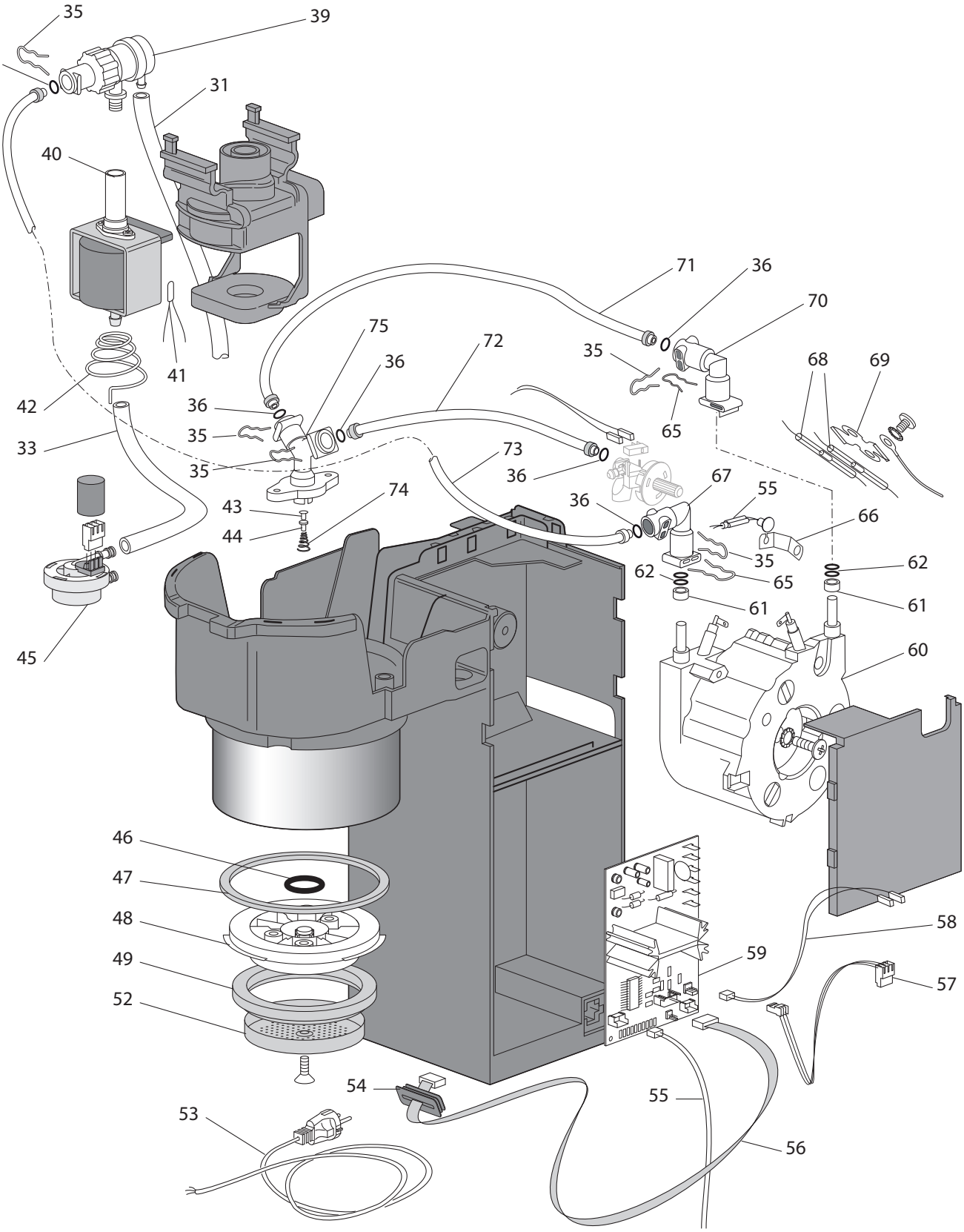
35
39
36
31
40
71
36
70
75
72
35
68
69
36
41
42
36
35
65
33
35
73
36
67
55
43
74
36
66
44
35
62
62
65
61
61
45
60
46
47
48
58
49
59
57
52
54
55
53
56

Position	Code	description
	7313287739	POD SUPPORT
01	7313285659	UPPER COVER
02	7313286119	COFFEE MEASURING SPOON
03	AS00003137	SMALL 1-CUP FILTER
04	AS00003138	LARGE 2-CUP FILTER
05	5513200179	Pod filter
06	AS00002706	FILTER HOLDER ASSEMBLY
07	6013214801	CUP HOLDER
08	5313249981	FLOAT
09	5313249971	DRIP TRAY
10	AS00002705	STEAM HOSE ASSEMBLY
11	5313237931	DISPENSER COVER
12	5513226761	CUP HOLDER WITH FRAME
13	7313285479	STEAM KNOB
15	7313285669	CONTROL BOARD
16	5113210421	MICROSWITCH
17	AS00002707	STEAM VALVE ASSEMBLY
18	5513200359	WATER TANK ASSEMBLY
19	5313251321	RIGHT PROFILE
26	5313251311	LEFT PROFILE
28	5913216331	ON/OFF PUSH BUTTON
29	5128109300	UNIPOLAR SWITCH (16A 250V)
30	5313236391	TRAY GASKET
31	5313219841	TUBE (L270)
32	7313285109	WATER TANK
33	5332265100	TUBE (SIL NAT) DI=4 L=120
34	5313229381	RUBBER FOOT PAD
35	6132101300	SPRING
36	5313217701	O-RING (D=3.85 T=2)
39	7313260161	ANTI-DRIP VALVE
40	5113211291	PUMP (ULKA 120V 52W)
41	5213211161	PUMP PROTECTOR
42	6113210761	SPRING
43	5332289700	VALVE
44	621986	RING
45	5213225251	FLOWMETER
46	537177	GASKET

47	5313221481	CLOSURE GASKET
48	5313222311	BREWING GASKET SUPPORT
49	5313221491	BOTTOM GASKET
52	6013211191	DIFFUSER
53	5013276429	POWER SUPPLY CORD WITH PLUG (US)
54	5313242291	CABLE RUBBER PAD
55	5232105100	SENSOR (NTC)
56	5013211961	6-POLE WIRING
57	5032509200	WIRING WITH CONNECTORS
58	5013276049	WIRING
59	AS00002709	PCB
60	5513217401	GENERATOR (R1300W 120V)
61	5332239300	SPACER
62	5313228791	GENERATOR GASKET
65	6132112100	CLIP
66	6113211071	FIXING BRACKET (NTC)
67	5332242400	CONNECTION
68	511876	TCO (192°)
69	6013211951	FIXING BRACKET (TCO)
70	5313218931	RIGHT ANGLE GENERATOR CONNECTION
71	5532118000	TUBE PTFE DI2-DE4 L=230 2BUSHES
72	5513213661	TUBE WITH 1 BUSH (L135)
73	5532111900	TUBE / 2 BUSHES (PTFE DI2-DE4 L=100)
74	6113211931	SPRING
75	5313222031	3-WAY VALVE CONNECTOR
76	5313274719	RUBBER FOOT PAD
77	AS00002710	NOZZLE